IMPERIAL

Digital Biosignal Processing

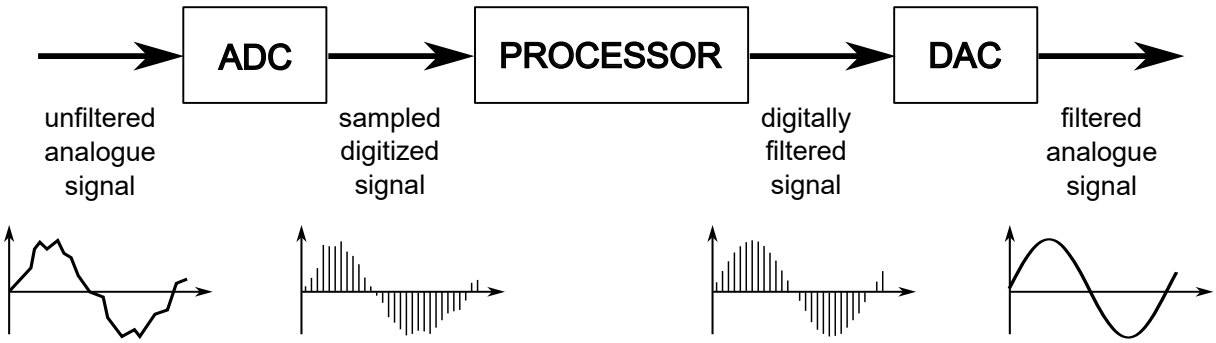

Binghuan Li

binghuan.li19@imperial.ac.uk

Last update: December 28, 2024

Preface, Rationale, & Acknowledgement

These notes are compiled based on the lectures of *Digital Biosignal Processing* delivered by *Professor Dario Farina* at the Department of Bioengineering, Imperial College London during September-December 2021. Additional examples were adopted and/or inspired by various educational sources, including the notes on Digital Signal Processing by *Dr Aidan Hogg* (Imperial), recordings of Signals and Systems by *Professor Alan Oppenheim* (MIT), and notes on Signals and Systems by *Dr Michael Adams* (University of Victoria).

I began drafting this document in 2021, completing the drafts for the first four sections by the summer of 2022. The subsequent sections were drafted raggedly in December 2022, June 2023, and December 2023, with the final proofreading completed in November 2024. It has been quite some time since my undergraduate years, and given that my current research focus is relatively distant from signal processing applications, I am less certain about the practical usefulness of this document. However, what remains clear is that this document takes me back to that bittersweet autumn of 2021 - Uren L9, RSM 335, unsolvable MiB coursework, and loads (!) of `MATLAB` exercises.

Note that this document is still in its beta version (Nov. 2024). A few chapters are pending to be proofread and improved.
The LaTeX files are now accessible on my GitHub repository. I hope it helps. Please report typos and inconsistencies to binghuan.li19@imperial.ac.uk.

To my undergraduate years.

November, 2024
London, UK

Cover image: Signal Processing Workflow: From Analog to Digitally Filtered Outputs, reproduced based on a figure from the lecture notes by *Robert F. Port*.

Contents

1 Sampling **4**
- 1.1 Sampling of a Continuous-Time Signal . . . 4
  - 1.1.1 Nyquist-Shannon Sampling Theorem . . . 6
- 1.2 Practical Digital Processing of Continuous-Time Signals . . . 6
- 1.3 Example Questions . . . 7

2 Discrete-Time Signals and Systems **8**
- 2.1 Discrete-Time Signals . . . 8
- 2.2 Discrete-Time Systems and Properties . . . 8
  - 2.2.1 Memory Systems . . . 8
  - 2.2.2 Linear Systems . . . 9
  - 2.2.3 Time-Invariant Systems . . . 10
  - 2.2.4 Causality . . . 10
  - 2.2.5 Stability . . . 11
- 2.3 Discrete-Time Linear Time-Invariant (LTI) Systems . . . 11
  - 2.3.1 Properties of Convolution . . . 12
- 2.4 Example Questions . . . 13

3 Discrete-Time and Discrete Fourier Transform **14**
- 3.1 Discrete-Time Fourier Transform . . . 14
- 3.2 Properties of DTFT . . . 14
- 3.3 Common DTFT Pairs . . . 17
- 3.4 From DTFT to Discrete Fourier Transform (DFT) . . . 17
  - 3.4.1 Power Spectral Density of DFT . . . 18
  - 3.4.2 Zero-Padding . . . 18
- 3.5 Summary . . . 19
- 3.6 Example Questions . . . 19

4 z-transform **21**
- 4.1 z-transform . . . 21
- 4.2 Region of Convergence . . . 22
- 4.3 Common z-Transform Pairs . . . 25
- 4.4 Properties of the z-transform . . . 25
- 4.5 LTI Systems and z-Transform . . . 26
- 4.6 Example Questions . . . 27

5 Digital Filters **29**
- 5.1 Filters with Linear Phase . . . 29
- 5.2 Difference Equation . . . 29
- 5.3 Finite Impulse Response (FIR) Filters . . . 30
  - 5.3.1 Definition . . . 30
  - 5.3.2 FIR Filter Design by Truncation . . . 31
  - 5.3.3 FIR Filter Design by Other Methods . . . 32

5.4 Infinite Impulse Response (IIR) Filters 33
5.4.1 Definition 33
5.4.2 IIR Filter Design by Bilinear Transformation 34

6 Random Processes **35**
6.1 Statistical Descriptions of Noise and Random Processes 35
6.1.1 Mean and Variance of a Distribution 35
6.1.2 Multivariant Probability Functions 36
6.2 Stationarity 38
6.2.1 Wide-Sense Stationarity 38
6.3 Ergodicity 39
6.3.1 Variability of Estimates 40
6.4 Power Spectral Density 41
6.5 Periodogram 42
6.6 Filtering of Random Signals 43
6.7 Linear Predictor 44
6.8 Modelling 45
6.9 Example Questions 45

Change in notation

From this section onward, Ω ('Omega') denotes the frequency in the context of a continuous-time signal; whereas ω ('omega') denotes the frequency in the context of a discrete-time signal.

Hence, the continuous-time Fourier transform (CTFT):

$$\underbrace{X(\omega) = \int_{-\infty}^{+\infty} x(t)e^{-j\omega t}\mathrm{d}t}_{\text{old notation}} \quad \Rightarrow \quad \underbrace{X(j\Omega) = \int_{-\infty}^{+\infty} x(t)e^{-j\Omega t}\mathrm{d}t}_{\text{new notation}}$$

1 Sampling

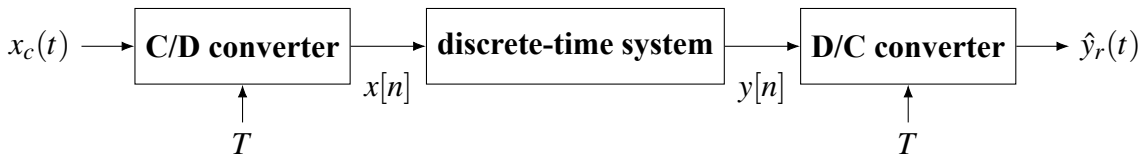

Fig. 1: *A very-brief overview of digital processing of continuous-time signals*

Figure 1 illustrates a concise process of digital processing of a continuous-time signal.

- The C/D conversion involves sampling a continuous-time signal to obtain a discrete-time signal.
- The D/C conversion involves the reconstruction of a continuous-time signal from the sampled discrete-time signal.

1.1 Sampling of a Continuous-Time Signal

Mathematically, sampling of a continuous-time signal $x_c(t) \to x[n]$ is:

$$x[n] = x_c(nT) \quad \text{for } -\infty < n < +\infty$$

where T is sampling period, $f_s = \dfrac{1}{T}$ is sampling frequency (or $\Omega_s = \dfrac{2\pi}{T}$ in radians).

- In general, the C/D transformation cannot be inverted.
- Infinite continuous signals can reproduce a given sequence of samples,

An ideal C/D converter applies the T property so that the sampling can be done without losing information.

Impulse train modulator $s(t)$ is:

$$s(t) = \sum_{n=-\infty}^{+\infty} \delta(t - nT)$$

The sampled signal $x_s(t)$ is obtained by multiplying the impulse train modulator (Figure 2.b) with the continuous-time signal $x_c(t)$ of interest (Figure 2.a):

$$\begin{aligned} x_s(t) &= x_c(t)\, s(t) \\ &= \sum_{n=-\infty}^{+\infty} x_c(t)\delta(t-nT) \\ &= \sum_{n=-\infty}^{+\infty} x_c(nT)\delta(t-nT) \end{aligned}$$

The sampled signal, $x_s(t)$, is still defined in the continuous-time domain, but it contains all information in the sampled discrete-time domain.

Apply the Fourier transform ($\mathscr{F}\{\cdot\}$) to $x_s(t)$:

$$\begin{aligned} X_s(\Omega) &= \mathscr{F}\{x_c(t)\} \cdot \mathscr{F}\{s(t)\} \\ &= \frac{1}{2\pi} X_c(\Omega) * \mathscr{F}\{s(t)\} \\ &= \frac{1}{T} X_c(\Omega) * \sum_{n=-\infty}^{+\infty} \delta(\Omega - k\Omega_s) \\ &= \boxed{\frac{1}{T} \sum_{n=-\infty}^{+\infty} X_c(\Omega - k\Omega_s)} \end{aligned}$$

where sampling frequency $\Omega_s = \Omega_0 = \frac{2\pi}{T}$.

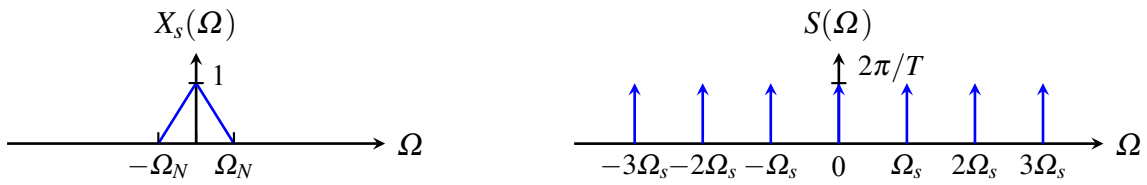

Fig. 2: *Spectrum of (left) the original continuous-time signal to be sampled, $X_s(\Omega)$ and (right) the sampler $S(\Omega)$ (as a δ-train).*

For sampled signals: Ω_N is the signal bandwidth

- if $\Omega_s \geq 2\Omega_N$, the replicas in the periodization do not overlap (Figure 3.a)
- if $\Omega_s < 2\Omega_N$, the replicas overlap, also known as **aliasing**(Figure 3.b).

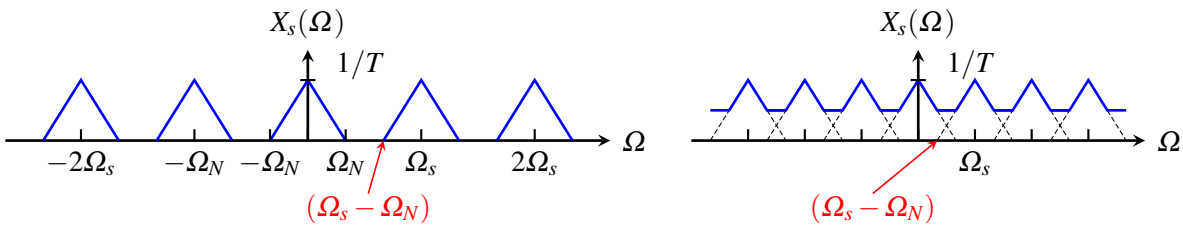

(a) *Sampling without aliasing when $\Omega_s \geq 2\Omega_N$.*

(b) *Sampling with aliasing when $\Omega_s < 2\Omega_N$*

Fig. 3: *The signal copies remain separate under a high sampling rate; while the signals are overlapped (aliasing) with a lower sampling rate.*

1.1.1 Nyquist-Shannon Sampling Theorem

Nyquist-Shannon sampling theorem states that: **to retain the ability to reproduce (reconstruct) the original signal, the minimum sampling frequency during signal sampling must be at least twice its frequency.**

Mathematically, let $x_c(t)$ be a band-limited signal with $X_c(\Omega) = 0$, for $|\Omega| \geq \Omega_N$. Then $x_c(t)$ is uniquely determined by its samples $x[n] = x_c(nT)$, if

$$\Omega_s = \frac{2\pi}{T} \geq 2\Omega_N$$

where $2\Omega_N$ is the minimal sampling rate and referred to as the **Nyquist rate**.

Nyquist-Shannon sampling theorem provides the condition under which the C/D transformation **can be inverted** without losing information, as shown in Figure 4.

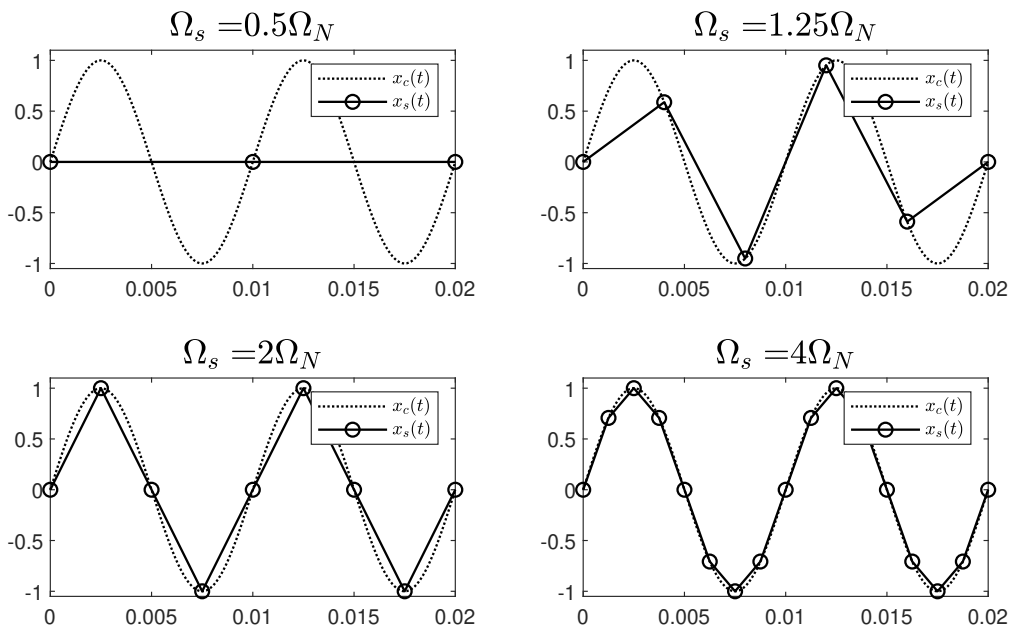

Fig. 4: *Sampling of a continuous signal $x_c(t) = \sin(200\pi t)$: (left to right, top to bottom) $\Omega_s = 0.5\Omega_N$, $\Omega_s = 1.25\Omega_N$, $\Omega_s = 2\Omega_N$, $\Omega_s = 4\Omega_N$. According to the Nyquist-Shannon sampling theorem, aliasing occurs when $\Omega_s < 2\Omega_N$*

1.2 Practical Digital Processing of Continuous-Time Signals

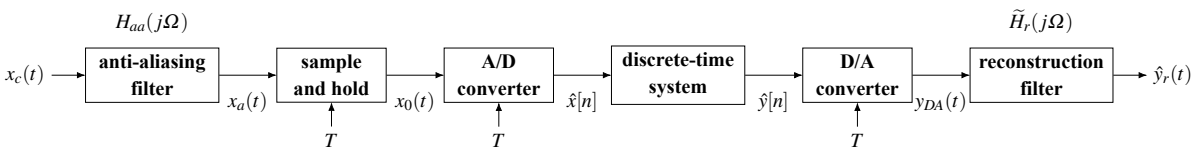

Fig. 5: *Overview of practical digital processing of continuous-time signals*

Ideal anti-aliasing filter: $x_c(t) \to x_a(t)$ remove all frequencies in time-continuous signal that are above half the sampling rate.

$$H_{aa}(j\Omega) = \begin{cases} 1, & |\Omega| \leq \pi/T \\ 0, & |\Omega| > \pi/T \end{cases}$$

Sample and hold: $x_a(t) \to x_0(t)$

$$x_0(t) = h_0(t) * \sum_{n=-\infty}^{\infty} x_c(nT)\delta(t-nT)$$

Quantization: the A/D is seen as an integration of a quantizer and a coder. A quantizer is a non-linear system that represents the amplitude values of the signal into a finite set of values.

In a uniform quantizer, sample values are rounded to the nearest quantization level, followed by binary coding.

Practical D/A conversion: $\hat{y}[n] \to y_{DA}(t)$

$$x_c(t) = \sum_{n=-\infty}^{+\infty} x_c(nT)h_r(t-nT) = \sum_{n=-\infty}^{+\infty} x_c(nT)\frac{\sin(\pi(t-nT)/T)}{\pi(t-nT)/T}$$

$$x_{DA}(t) = \sum_{n=-\infty}^{+\infty} x[n]h_p(t-nT) + \sum_{n=-\infty}^{+\infty} e[n]h_p(t-nT)$$

1.3 Example Questions

Question 1.1

The continuous-time signal $x_c(t)$ is sampled with sampling frequency Ω_s to obtain the sampled signal $x_s(t) = x_c(t)\sum_{-\infty}^{+\infty}\delta(t-nT)$ with T being the sampling interval ($\Omega_s = \frac{2\pi}{T}$). The Fourier transform of $x_c(t)$ is $X_c(j\Omega) = \frac{1}{\Omega_N}|\Omega| + 1$ for $|\Omega| \leq \Omega_N$ and $X_c(j\Omega) = 0$ for $|\Omega| > \Omega_N$. Assuming $\Omega_s = \Omega_N$, which of the following expressions for the sampled signal $x_s(t)$ is correct?

(a) $x_s(t) = x_c(t)$

(b) $x_s(t) = \frac{1}{T}\delta(t)$

(c) $x_s(t) = \sum_{-\infty}^{+\infty}\delta(t-nT)$

(d) $x_s(t) = 0$

(e) $x_s(t) = \sum_{-\infty}^{+\infty}x_c(t-nT)$

ANS: (d)

2 Discrete-Time Signals and Systems

2.1 Discrete-Time Signals

A discrete-time signal is mathematically represented as a sequence of data. The sequence x contains the numbers indexed by the discrete-time integer n:

$$x = \{x[n]\}, \quad -\infty < n < \infty$$

Any arbitrary sequence can be expressed as the sum of scaled and delayed impulses:

$$x[n] = \sum_{k=-\infty}^{+\infty} x[k]\delta[n-k]$$

where $\delta[n-k]$ is the shift of the unit impulse sequence $\delta[n]$ (Kronecker delta), defined as

$$\delta[n] = \begin{cases} 0, & n \neq 0 \\ 1, & n = 0 \end{cases}$$

2.2 Discrete-Time Systems and Properties

$$x[n] \longrightarrow \boxed{T\{\cdot\}} \longrightarrow y[n]$$

Fig. 6: *Representation of a discrete-time system. $T\{\cdot\}$ is a transformation operator that maps an input sequence $x[n]$ into an output sequence $y[n]$.*

Example 2.1 The Moving Average System

The moving average system is a discrete-time system. It is defined as

$$\begin{aligned} y[n] &= \frac{1}{M_1+M_2+1} \sum_{k=-M_1}^{M_2} x[n-k] \\ &= \frac{1}{M_1+M_2+1}(x[n+M_1]+x[n+M_1-1]+\ldots+x[n]+x[n-1]+x[n-M_2]) \end{aligned}$$

The system computes the nth sample of the output sequence as the average of (M_1+M_2+1) samples of the input sequence around the nth sample.

2.2.1 Memory Systems

A system is *memoryless* if the system output $y[n]$ at every value of n depends only on the input $x[n]$ at the same value of n; *i.e.* its output cannot rely on any past or future values the input.

Example 2.2 A Memoryless System

$$y[n] = (x[n])^2, \quad \text{for each value of } n.$$

Example 2.3 **A System with Memory: ideal accumulator**

$$y[n] = \sum_{k=-\infty}^{n} x[k].$$

By setting the value n at any arbitrary point $n = n_0$, we have

$$y[n_0] = \sum_{k=-\infty}^{n_0} x[k],$$

clearly, $y[n_0]$ depends on $x[k]$ for $-\infty < k < n_0$, hence, the system has memory.

2.2.2 Linear Systems

A system is *linear* if and only if

$$T\{x_1[n] + x_2[n]\} = T\{x_1[n]\} + T\{x_2[n]\} = y_1[n] + y_2[n]$$

and

$$T\{ax[n]\} = aT\{x[n]\} = ay[n]$$

Example 2.4 **The Accumulator System**

The system

$$y[n] = \sum_{k=-\infty}^{n} x[k]$$

is an accumulator system as the output at n is the sum of the present and all previous input samples. The system is linear, as the proof shown below: define two arbitrary inputs $x_1[n]$ and $x_2[n]$ and their corresponding outputs:

$$y_1[n] = \sum_{k=-\infty}^{n} x_1[k]$$

$$y_2[n] = \sum_{k=-\infty}^{n} x_2[k]$$

When $x_3[k] = ax_1[n] + bx_2[n]$,

$$\begin{aligned} y_3[n] &= \sum_{k=-\infty}^{n} x_3[k] \\ &= \sum_{k=-\infty}^{n} (ax_1[n] + bx_2[n]) \\ &= a\sum_{k=-\infty}^{n} x_1[k] + b\sum_{k=-\infty}^{n} x_2[k] \\ &= ay_1[k] + by_2[k] \end{aligned}$$

Therefore, the accumulator system is linear.

2.2.3 Time-Invariant Systems

A system is *time-invariant* if the shift or delay of the input sequence causes a corresponding shift in the output sequence. Mathematically, if $y[n] = T\{x[n]\}$, the input sequence $x_1[n] = x[n-n_0]$ produces at output the sequence $y_1[n] = y[n-n_0]$.

Example 2.5 The Compressor System

A compressor is defined by the relation

$$y[n] = x[Mn], \quad -\infty < n < \infty$$

with M a positive integer. The system creates the output sequence by selecting every M^{th} sample.

This system is *not* time-invariant, as the proof shown below: consider a system output $y_1[n]$ corresponding to the input $x_1[n] = x[n-n_0]$,

$$y_1[n] = x_1[Mn] = x[Mn-n_0]$$

If the system is time-invariant, the input to the system $x_1[n]$ should yield the output $y[n-n_0]$,

$$y[n-n_0] = x[M(n-n_0)]$$

Clearly, $x[Mn-n_0] \neq x[M(n-n_0)] \rightarrow$ the system is not time-invariant.

2.2.4 Causality

A system is *causal* if, for every choice of n_0, the output sequence value at the index $n = n_0$ depends only on the input sequence values for $n \leq n_0$, *i.e.*, the system output purely depends on the past and current input, not future input.

Example 2.6 The Forward and Backward Difference Systems

- **The forward difference system** is defined as

  $$y[n] = x[n+1] - x[n]$$

  Clearly, the forward difference system is *not* causal, since the current value of the output depends on a future value of the input. Mathematically, consider two inputs and their outputs:

  - $x_1[n] = \delta[n-1] \longrightarrow y_1[n] = \delta[n] - \delta[n-1], \quad$ for all n
  - $x_2[n] = 0 \longrightarrow y_2[n] = 0, \quad$ for all n

  Note that $x_1[n] = x_2[n]$ for $n \leq 0$ [a], so by definition of causality, $y_1[n] = y_2[n]$ should always hold for $n \leq 0$, for which the case $n = 0$ is an exception that violates the condition for causality - the system is not casual.

- **The backward difference system** is defined as

$$y[n] = x[n] - x[n-1]$$

The backward difference system is causal since the output only depends on the present and past values of the input. Same mathematical proof as above.

[a] By definition, n_0 can be randomly selected, $n_0 = 1, 2, \ldots$ also works for this example!

2.2.5 Stability

A system is *stable* if and only if every bounded input sequence produces a bounded output sequence (bounded input, bounded output, BIBO). Mathematically, if the input $x[n]$ is bounded, there exists a fixed positive finite value B_x such that

$$|x[n]| \leq B_x < \infty, \quad \text{for all } n$$

and there exists a fixed positive finite value B_y corresponding to every bounded input,

$$|y[n]| \leq B_y < \infty, \quad \text{for all } n$$

Example 2.7 **The Accumulator System (cont'd)**

The accumulator system is *not* stable: consider the case when $x[n] = u[n]$, the input is bounded by $B_x = 1$. The output

$$y[n] = \sum_{k=-\infty}^{n} u[k] = \begin{cases} 0, & n < 0 \\ (n+1), & n \geq 0 \end{cases}$$

Clearly, there is no finite bound B_y such that $(n+1) \leq B_y < \infty$. The system is unstable.

2.3 Discrete-Time Linear Time-Invariant (LTI) Systems

The output of an LTI system is fully determined by the response of the system to the impulse.

$$y[n] = T\{x[n]\} = T\left\{\sum_{k=-\infty}^{+\infty} x[k]\delta[n-k]\right\} = \sum_{k=-\infty}^{+\infty} x[k]T\{\delta[n-k]\} = \sum_{k=-\infty}^{+\infty} x[k]h[n-k]$$

where $h[n-k]$ is the system response to the impulse $\delta[n-k]$.

The relation between the input and output of an LTI system is expressed by **convolution**.

$$y[n] = \sum_{k=-\infty}^{+\infty} x[k]h[n-k] = x[n] * h[n]$$

Example 2.8 **Convolution**

Find the convolution between $x[n]$ and $h[n]$ where $x[n] = \left(\frac{1}{2}\right)^n u[n]$ and $h[n] = u[n]$.

From the definition of convolution,

$$x[n] * h[n] = \sum_{k=-\infty}^{+\infty} x[k]h[n-k] = \sum_{k=-\infty}^{+\infty} \left(\frac{1}{2}\right)^k u[k]u[n-k]$$

Since $u[k] = 0$ for $k < 0$, and $u[n-k] = 0$ for $k > n$, we can further conclude that

$$u[k]u[n-k] = \begin{cases} 0, & 0 \le k \le n \\ 1, & \text{otherwise} \end{cases}$$

leading to the convolution can be rearranged in the form

$$x[n] * h[n] = \sum_{k=0}^{n} \left(\frac{1}{2}\right)^k, \qquad \text{for } n \le 0.$$

or, a more compact expression,

$$x[n] * h[n] = \left(\sum_{k=0}^{n} \left(\frac{1}{2}\right)^k\right) u[n],$$

which is a geometric sequence. The summation can be further found by

$$x[n] * h[n] = \left[\frac{\left(\frac{1}{2}\right)^n - 1}{\frac{1}{2} - 1}\right] = \left[2 - \left(\frac{1}{2}\right)^n\right] u[n].$$

2.3.1 Properties of Convolution

Convolution is commutative For any two sequences $x[n]$ and $h[n]$, we have

$$x[n] * h[n] = h[n] * x[n].$$

Convolution is associative For any three sequences $x[n]$, $h_1[n]$, and $h_2[n]$, we have

$$(x[n] * h_1[n]) * h_2[n] = x[n] * (h_1[n] * h_2[n]).$$

Convolution is distributive For any three sequences $x[n]$, $h_1[n]$, and $h_2[n]$, we have

$$x[n] * (h_1[n] + h_2[n]) = x[n] * h_1[n] + x[n] * h_2[n].$$

2.4 Example Questions

Question 2.1

Consider the linear, time-invariant (LTI) system with impulse response $h[n] = \delta[n] - 2\delta[n-1] + 3\delta[n-2]$. This system is:

(a) Non-causal, with memory

(b) Memoryless

(c) Non-causal, stable

(d) Causal, with memory

(e) Unstable

ANS: (d)

Question 2.2

Consider the deterministic discrete-time signals $x_1[n] = \delta[n] - \delta[n-1]$ and $x_2[n] = \delta[n] - 2\delta[n-1] + \delta[n-2]$. The convolution between $x_1[n]$ and $x_2[n]$ is equal to:

(a) $\delta[n] - 3\delta[n-1]$

(b) $\delta[n] - 3\delta[n-1] + 3\delta[n-2] - \delta[n-3]$

(c) $\delta[n] - \delta[n-3]$

(d) $\delta[n] + 3\delta[n-1] + 3\delta[n-2] + \delta[n-3]$

(e) 0

ANS: (b)

3 Discrete-Time and Discrete Fourier Transform

3.1 Discrete-Time Fourier Transform

- The discrete-time Fourier transform (DTFT) is defined as

$$X(e^{j\omega}) = \sum_{n=-\infty}^{+\infty} x[n]\, e^{-j\omega n}.$$

- Inverse transform

$$\begin{aligned} x[n] &= \frac{1}{2\pi}\int_{-\pi}^{+\pi} X(e^{-j\omega})e^{j\omega n}\mathrm{d}\omega \\ &= \lim_{\Delta\omega\to 0}\sum_{k}[X(e^{jk\Delta\omega})\frac{\Delta\omega}{2\pi}]e^{jk\Delta\omega n} \end{aligned}$$

  Fourier transform decomposes sequences using a linear combination of complex exponentials with incremental amplitudes.

- Therefore, the frequency response of a LTI system is the Fourier transform of the impulse response:

$$H(e^{j\omega}) = \sum_{n=-\infty}^{+\infty} h[n]e^{-j\omega n}$$

Example 3.1 Frequency Response of the Moving Average System

The impulse response of the moving average system is

$$h[n] = \begin{cases} \frac{1}{M_1+M_2+1}, & -M_1 \le n \le M_2 \\ 0, & \text{otherwise} \end{cases}$$

The frequency response with $M_1 = 0$ is

$$\begin{aligned} H(e^{j\omega}) &= \frac{1}{M_2+1}\sum_{n=0}^{M_2} e^{-j\omega n} \\ &= \frac{1}{M_2+1}\left(\frac{1-e^{-j\omega(M_2+1)}}{1-e^{-j\omega}}\right) \\ &= \frac{1}{M_2+1}\frac{(e^{j\omega(M_2+1)/2}-e^{-j\omega(M_2+1)/2})e^{-j\omega(M_2+1)/2}}{(e^{j\omega/2}-e^{-j\omega/2})e^{-j\omega/2}} \\ &= \frac{1}{M_2+1}\frac{\sin[\omega(M_2+1)/2]}{\sin\omega/2}e^{-j\omega M_2/2} \end{aligned}$$

3.2 Properties of DTFT

Periodicity If $x[n] \overset{\mathscr{F}}{\longleftrightarrow} X(e^{j\omega})$, then

$$X(e^{j\omega}) = X(e^{j(\omega+2\pi)}),$$

i.e., $X(e^{j\omega})$ is 2π-periodic.

Linearity If $x_1[n] \overset{\mathscr{F}}{\longleftrightarrow} X_1(e^{j\omega})$ and $x_2[n] \overset{\mathscr{F}}{\longleftrightarrow} X_2(e^{j\omega})$, then

$$a_1x_1[n] + a_2x_2[n] \overset{\mathscr{F}}{\longleftrightarrow} a_1X_1(e^{j\omega}) + a_2X_2(e^{j\omega}),$$

where a_1 and a_2 are arbitrary real-valued or complex-valued constants.

Translation (Time and Frequency Shifting) If $x[n] \overset{\mathscr{F}}{\longleftrightarrow} X(e^{j\omega})$, then the time shifting property is

$$x[n-n_d] \overset{\mathscr{F}}{\longleftrightarrow} e^{-j\omega n_d}X(e^{j\omega}),$$

where n_d is an arbitrary integer. Similarly, the frequency shifting property is

$$e^{j\omega_d n}x[n]\} \overset{\mathscr{F}}{\longleftrightarrow} X(e^{j(\omega-\omega_d)})$$

Conjugate Symmetry For a real-valued sequence $x[n]$, if $x[n] \overset{\mathscr{F}}{\longleftrightarrow} X(e^{j\omega})$, then

$$X(e^{j\omega}) = X^*(e^{-j\omega}),$$

where the asterisk * denotes the complex conjugate (not convolution here).

- The magnitude of DTFT, $|X(e^{j\omega})|$ is an *even* function of ω.
- The magnitude of DTFT, $\angle X(e^{j\omega})$ is an *odd* function of ω.

Derivation 3.1

Fourier transform:

$$X(e^{j\omega}) = \sum_{n=-\infty}^{+\infty} x[n]e^{-j\omega n}$$

Replace ω to $-\omega$:

$$X(e^{-j\omega}) = \sum_{n=-\infty}^{+\infty} x[n]e^{+j\omega n}$$

Take the complex conjugate of the Fourier transform above:

$$X^*(e^{-j\omega}) = \sum_{n=-\infty}^{+\infty} \underbrace{x^*[n]}_{x[n]} e^{-j\omega n}$$

Since $x[n] \in \mathbb{R}$, the complex conjugate of the Fourier transform is equivalent to Fourier transform:

$$X(e^{-j\omega}) = X^*(e^{-j\omega})$$

Furthermore, express the Fourier transform in terms of a real part and an imaginary part:

$$X(e^{j\omega}) = X_{\mathbb{R}}(e^{j\omega}) + jX_{\mathbb{I}}(e^{j\omega})$$

The complex conjugate of the Fourier transform is thus

$$X^*(e^{-j\omega}) = X_{\mathbb{R}}(e^{-j\omega}) - jX_{\mathbb{I}}(e^{-j\omega})$$

Equate the two expressions above,

$$X_{\mathbb{R}}(e^{j\omega}) = X_{\mathbb{R}}(e^{-j\omega})$$

$$X_{\mathbb{I}}(e^{j\omega}) = -X_{\mathbb{I}}(e^{-j\omega})$$

That's saying, the real part of the Fourier transform is an *even* function of ω, and the imaginary part of the Fourier transform is an *odd* function of ω. The magnitude of the Fourier transform is an *even* function of ω; the phase of the Fourier transform is an *odd* function of ω.

Time Reversal If $x[n] \overset{\mathscr{F}}{\longleftrightarrow} X(e^{j\omega})$, then

$$x[-n] \overset{\mathscr{F}}{\longleftrightarrow} X(e^{-j\omega}) = X^*(e^{j\omega}).$$

Parseval's Theorem

$$\sum_{n=-\infty}^{+\infty} |x[n]|^2 = \frac{1}{2\pi}\int_{-\infty}^{+\infty} |X(e^{j\omega})|^2 \mathrm{d}\omega$$

where $|X(e^{j\omega})|^2$ is the *energy density spectrum* of the sequence, which determines how the energy is distributed in the frequency domain.

Convolution If $x_1[n] \overset{\mathscr{F}}{\longleftrightarrow} X_1(e^{j\omega})$ and $x_2[n] \overset{\mathscr{F}}{\longleftrightarrow} X_2(e^{j\omega})$, then

$$x_1[n] * x_2[n] \overset{\mathscr{F}}{\longleftrightarrow} X_1(e^{j\omega})X_2(e^{j\omega}),$$

i.e., the convolution of two signals in the time domain is equivalent to the multiplication in the frequency domain. That is saying, for an LTI system, we have

$$y[n] = x[n] * h[n] \overset{\mathscr{F}}{\longleftrightarrow} Y(e^{j\omega}) = X(e^{j\omega})H(e^{j\omega}).$$

3.3 Common DTFT Pairs

$x[n]$	$X(e^{j\omega})$
$\delta[n]$	1
1	$2\pi\sum_{n=-\infty}^{+\infty}\delta(\omega-2\pi n)$
$u[n]$	$\frac{e^{j\omega}}{e^{j\omega}-1}\sum_{n=-\infty}^{+\infty}\pi\delta(\omega-2\pi n)$
$a^n u[n]$, $\lvert a\rvert<1$	$\frac{e^{j\omega}}{e^{j\omega}-a}$
$-a^n u[-n-1]$, $\lvert a\rvert>1$	$\frac{e^{j\omega}}{e^{j\omega}-a}$
$a^{\lvert n\rvert}$, $\lvert a\rvert<1$	$\frac{1-a^2}{1-2a\cos\omega+a^2}$
$\cos(\omega_0 n)$	$\pi\sum_{k=\infty}^{+\infty}[\delta(\omega-\omega_0-2\pi k)+\delta(\omega+\omega_0-2\pi k)]$
$\sin(\omega_0 n)$	$j\pi\sum_{k=\infty}^{+\infty}[\delta(\omega+\omega_0-2\pi k)-\delta(\omega-\omega_0-2\pi k)]$
$u[n]-u[n-M]$	$e^{-j\omega(M-1)/2}\left(\frac{\sin(M\omega/2)}{\sin(\omega/2)}\right)$

3.4 From DTFT to Discrete Fourier Transform (DFT)

Sampling the frequency domain in DTFT leads to the DFT

- The discrete-time Fourier transform (DTFT) requires a continuity of its frequency ω.
- If we sample the frequency $\omega=\dfrac{2\pi k}{N}$ where $k\in[0,N-1]$ from DTFT, the sampled signal $X[k]$ is

$$X[k]=X(e^{j\omega})\big|_{\omega=\frac{2\pi k}{N}}=\sum_{n=0}^{N-1}x[n]\,e^{-j\frac{2\pi k}{N}n}.$$

  This process is the **discrete Fourier transform** (DFT). DFT is a sequence with the same duration as the discrete-time sequence, with a sampled frequency axis.

- The **inverse discrete Fourier transform** is

$$x[n]=\frac{1}{N}\sum_{k=0}^{N-1}X[k]\,e^{j\frac{2\pi k}{N}n}.$$

  DFT is sufficient to reconstruct the original discrete-time series, given the discrete-time series is of finite duration.

What happens when we sample the frequency domain? Let $\widetilde{X}(e^{j\omega})$ denote the signal results from sampling $X(e^{j\omega})$ at the frequency $\omega=\dfrac{2\pi k}{N}$ (where $k\in[0,N-1]$):

$$\widetilde{X}(e^{j\omega})=X(e^{j\omega})\overbrace{\sum_{k=-\infty}^{+\infty}\delta\left(\omega-\frac{2\pi k}{N}\right)}^{\text{sampler}},$$

by applying the inverse Fourier transform of $\widetilde{X}(e^{j\omega})$,

$$\widetilde{x}[n] = N \sum_{k=-\infty}^{+\infty} x[n-kN],$$

for which we now obtained a periodic signal (in its time domain). This tells us that **sampling the Fourier transform in the *frequency* domain corresponds to the periodization in the *time* domain**.

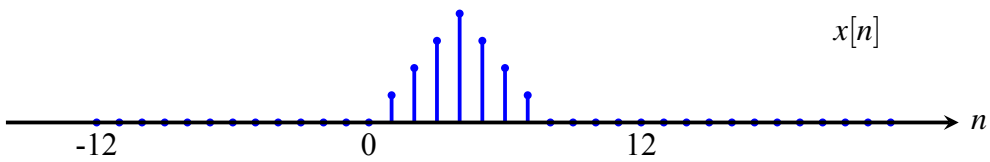

(a) *Finite sequence of* $x[n]$

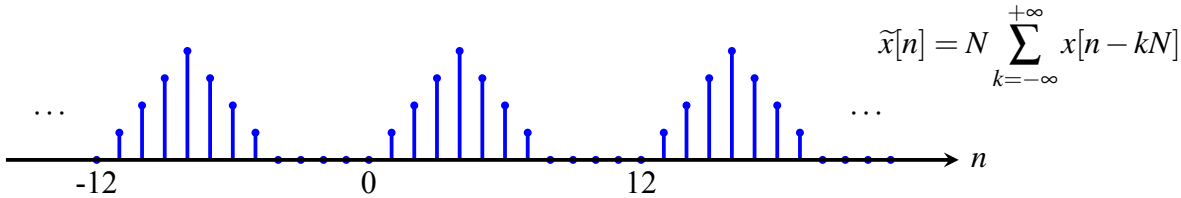

(b) *Periodic sequence* $\widetilde{x}[n]$ *corresponding to the sampling of Fourier transform of* $x[n]$

Fig. 7: *Illustration of a discrete-time signal* $x[n]$ *and its periodic extension* $\widetilde{x}[n]$.

3.4.1 Power Spectral Density of DFT

Power spectral density (PSD, also known as the power spectrum) quantifies the power of the signal per unit frequency.

$$PSD[k] = \frac{1}{N}|X[k]|^2 = \frac{1}{N}\left|\sum_{n=0}^{N-1} x[n]e^{-j2\pi kn/N}\right|^2.$$

3.4.2 Zero-Padding

Zero padding is the process of appending extra zeros to the end of a signal before performing DFT. Mathematically,

$$\hat{x}[n] = \begin{cases} x[n], & \text{for } n = 0,\ldots,N-1 \\ 0, & \text{for } n = N,\ldots,M \end{cases},$$

where M, N are two integers, and $M > N$.

Zero padding causes DTF to be evaluated from DTFT with more samples in ω_k, *i.e.*, denser frequency samples are obtained, hence, a smoother frequency spectrum.

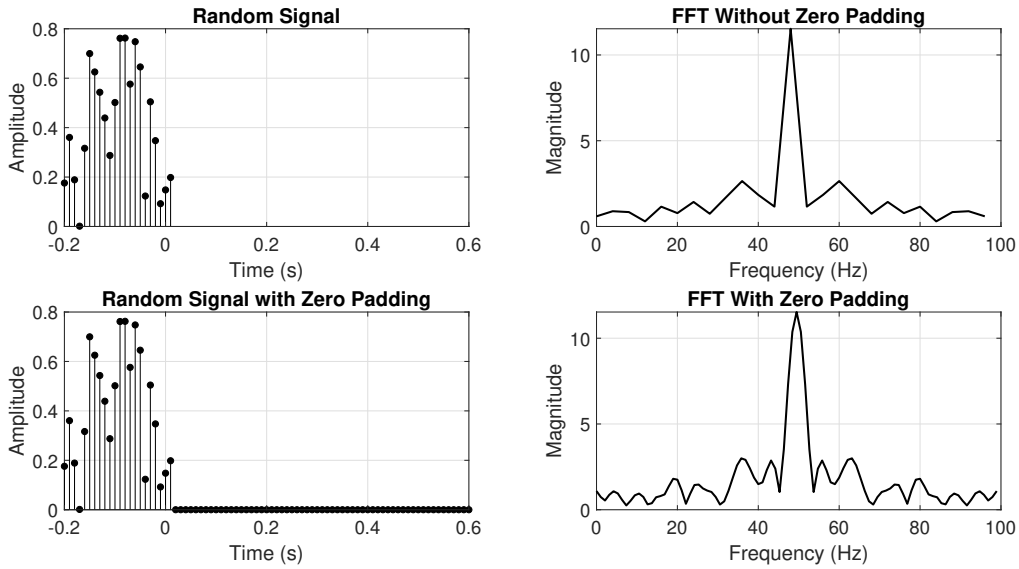

Fig. 8: *Effect of zero-padding on the resolution of the Fourier Transform of a random signal.*

3.5 Summary

	continuous time	**discrete time**
continuous frequency	Fourier transform $X(j\Omega) = \int_{-\infty}^{+\infty} x(t)e^{-j\Omega t}\mathrm{d}t$ $x(t) = \frac{1}{2\pi}\int_{-\infty}^{+\infty} X(j\Omega)e^{j\Omega t}\mathrm{d}\Omega$	discrete-time Fourier transform $X\left(e^{j\omega}\right) = \sum_{n=-\infty}^{+\infty} x[n]e^{-j\omega n}$ $x[n] = \frac{1}{2\pi}\int_{-\pi}^{+\pi} X\left(e^{j\omega}\right)e^{j\omega n}\mathrm{d}\Omega$
discrete frequency	Fourier series $c_n = \frac{1}{T}\int_{-T/2}^{+T/2} x_T(t)e^{-j2\pi n/T}\mathrm{d}t$ $x(t) = \sum_{n=-\infty}^{+\infty} c_n e^{j2\pi n/T}$	discrete Fourier transform $X[k] = \sum_{n=0}^{N-1} x[n]e^{-j2\pi kn/N}$ $x[n] = \frac{1}{N}\sum_{k=0}^{N-1} X[k]e^{j2\pi kn/N}$

3.6 Example Questions

Question 3.1

Consider the discrete-time signal $x[n] = e^{\frac{j\pi n}{2}}$ and a linear, time-invariant system with transfer function $H(e^{-j\omega}) = e^{-j\omega}$. The output $y[n]$ of this system when the input $x[n]$ is:

(a) $y[n] = 0$

(b) $y[n] = -je^{\frac{j\pi n}{2}}$

(c) $y[n] = je^{\frac{j\pi n}{2}}$

(d) $y[n] = x[n] \cdot |H(e^{\frac{j\pi}{2}})|$

(e) $y[n] = x[n]$

ANS: (b)

Question 3.2

Consider the deterministic discrete-time signal $x[n] = \delta[n] - \delta[n-1]$ which has a length of $N = 2$ samples. Which of the following expressions for the Discrete Fourier Transform (DFT) $X[k]$ (for $k = 0, 1$) of $x[n]$ is correct?

(a) $X[0] = 0, X[1] = 2$

(b) $X[0] = 1, X[1] = -1$

(c) $X[0] = j, X[1] = -j$

(d) $X[0] = e^{j\frac{\pi}{3}}, X[1] = e^{j\frac{\pi}{4}}$

(e) $X[0] = 1, X[1] = -j$

ANS: (a)

Question 3.3

Given the following discrete-time signal:

$$x[n] = \begin{cases} 1, & n = 0 \\ -3, & n = 1 \\ -1, & n = 2 \\ 0, & n = 3 \end{cases}$$

(a) Compute the discrete-time Fourier transform $X(e^{j\omega})$.

ANS: $X(e^{j\omega}) = 1 - 3e^{-j\omega} - e^{-j2\omega}$.

(b) Compute the discrete Fourier transform $X[k]$ over four points.

ANS: $X[k] = \begin{cases} -3, & k = 0 \\ 2+3j, & k = 1 \\ 3, & k = 2 \\ 2-3j, & k = 3 \end{cases}$.

4 z-transform

4.1 z-transform

Definition

- The z-transform of a sequence $x[n]$ is:

$$X(z) = \sum_{n=-\infty}^{+\infty} x[n]z^{-n}$$

where $z = re^{j\omega}$ is a complex variable.

- Recall that, the discrete-time Fourier transform is defined as

$$X(e^{j\omega}) = \sum_{n=-\infty}^{+\infty} x[n]e^{-j\omega n}$$

Comparing z-transform and DTFT, it is clear that the discrete-time Fourier transform is a special case of z-transform with $r = 1$. Equivalently, $|z| = 1$, as the *unit circle* with $0 \leq \omega \leq 2\pi$ shown in Figure 9.

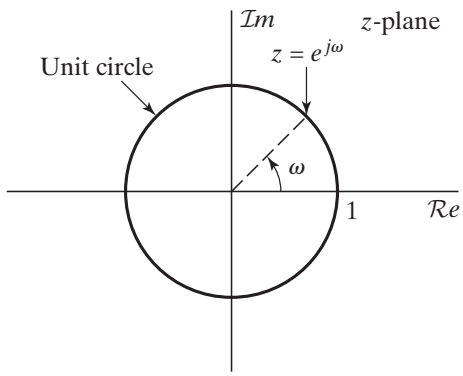

Fig. 9: *The unit circle with $r = 1$ in the complex z-plane*

This tells us that, the z-transform can be viewed as a generalization of the classical Fourier transform.

Remarks on the z-transform The z-transform is the counterpart of the Laplace transform in the continuous time domain.

- Bilateral Laplace transform:

$$X(s) = \int_{-\infty}^{+\infty} x(t)e^{-st}\mathrm{d}t$$

- z-transform:

$$X(z) = \sum_{n=-\infty}^{+\infty} x[n]z^{-n}$$

4.2 Region of Convergence

- **What is the condition for DTFT to converge?** Applying the property *"The magnitude of sum has to be less or equal than the sum of magnitudes"* to the magnitude of Fourier transform (DTFT):

$$|X(e^{j\omega})| = \left| \sum_{n=-\infty}^{+\infty} x[n]e^{-j\omega n} \right| \leq \sum_{n=-\infty}^{+\infty} |x[n]| \cancel{|e^{-j\omega n}|}^{1}$$

  This conclusion helps us to determine the condition for the convergence of DTFT: if DTFT converges, $|X(e^{j\omega})| < \infty$, that is

$$|X(e^{j\omega})| \leq \sum_{n=-\infty}^{+\infty} |x[n]| < \infty$$

  we thus only need to evaluate the value of $\sum_{n=-\infty}^{+\infty} |x[n]|$.

- **Not all Fourier transform converges!** The power series representing the Fourier transform does not converge for all sequences, the infinite sum may not always in finite.

Example 4.1

For $x[n] = (\frac{1}{2})^n u[n]$, the Fourier transform converges to 2:

$$\sum_{n=-\infty}^{+\infty} |x[n]| = 2$$

Example 4.2

For $x[n] = (2)^n u[n]$, the Fourier transform diverges:

$$\sum_{n=-\infty}^{+\infty} |x[n]| = +\infty$$

- Extending the aforementioned concept to the z-transform: z-transform does not converge for all values of z. For any given sequence, the region of values of z for which the z-transform power series converges is called the *region of convergence*, or *ROC*.

$$|X(z)| = \left| \sum_{n=-\infty}^{+\infty} x[n]z^{-n} \right| \leq \sum_{n=-\infty}^{+\infty} |x[n]||z|^{-n} < \infty$$

  we only need to evaluate the value of $\sum_{n=-\infty}^{+\infty} |x[n]||z|^{-n}$.

- If the convergence condition is satisfied by an arbitrary value z_1, then the convergence condition is also satisfies by all values of z such that $|z| = z_1$. Therefore, we can graphically represent the ROC for $0 \leq z_1 < |z| < z_2 \leq \infty$, as shown in Figure 10.

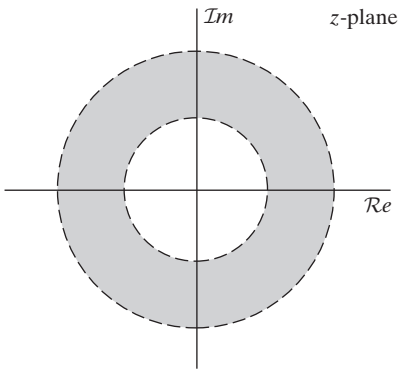

Fig. 10: *Graphical representation of region of convergence for* $0 \leq z_1 < |z| < z_2 \leq \infty$

Example 4.3 Sum of two exponential sequences

Consider a signal that is the sum of two real exponentials:

$$x[n] = \left(\frac{1}{2}\right)^n u[n] + \left(-\frac{1}{3}\right)^n u[n]$$

The z-transform is

$$\begin{aligned}
X(z) &= \sum_{n=-\infty}^{+\infty} \left\{ \left(\frac{1}{2}\right)^n u[n] + \left(-\frac{1}{3}\right)^n u[n] \right\} z^{-n} \\
&= \sum_{n=-\infty}^{+\infty} \left(\frac{1}{2}\right)^n u[n] z^{-n} + \sum_{n=-\infty}^{+\infty} \left(-\frac{1}{3}\right)^n u[n] z^{-n} \\
&= \sum_{n=0}^{+\infty} \left(\frac{1}{2} z^{-1}\right)^n + \sum_{n=0}^{+\infty} \left(-\frac{1}{3} z^{-1}\right)^n \\
&= \frac{1}{1-\frac{1}{2}z^{-1}} + \frac{1}{1+\frac{1}{3}z^{-1}} = \frac{2(1-\frac{1}{12}z^{-1})}{(1-\frac{1}{2}z^{-1})(1+\frac{1}{3}z^{-1})} \\
&= \boxed{\frac{2z(z-\frac{1}{12})}{(z-\frac{1}{2})(z+\frac{1}{3})}}
\end{aligned}$$

Poles: $z = \frac{1}{2}, z = -\frac{1}{3}$, zero: $z = \frac{1}{12}$. For convergence of $X(z)$, it requires both $\left|(\frac{1}{2})z^{-1}\right| < 1$ and $\left|(-\frac{1}{3})z^{-1}\right| < 1$. Equivalently, $|z| > \frac{1}{2}$ and $|z| > \frac{1}{3}$. The corresponding pole-zero plot and ROC is shown in Figure 11.

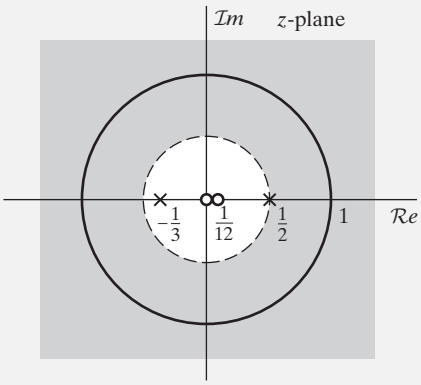

Fig. 11: *Pole-zero plot and ROC for* $\frac{2z(z-\frac{1}{12})}{(z-\frac{1}{2})(z+\frac{1}{3})}$

Remarks

- Sum of geometric sequence: $S_n = \dfrac{a_1(r_n - 1)}{r-1}$, where a_1 is the first term of the sequence, r is the common ratio. This explains how we get the sum of exponentials above.
- One good way to understand the convergence criterion of $X(z)$, we can think the denominator should be negative (*analogous to the stability criterion for a system from Year-2 Control module*).

Example 4.4 **Finite-length truncated exponential sequence**

Consider the signal

$$x[n] = \begin{cases} a^n, & 0 \le n \le N-1, \\ 0, & \text{otherwise.} \end{cases}$$

The z-transform is

$$X(z) = \sum_{n=0}^{N-1} a^n z^{-n} = \sum_{n=0}^{N-1} (az^{-1})^n = \frac{1-(az^{-1})^N}{1-az^{-1}} = \boxed{\frac{1}{z^{N-1}} \frac{z^N - a^N}{z-a}}$$

The ROC is determined by the set of z values for which

$$\sum_{n=0}^{N-1} |az^{-1}|^n < \infty$$

The sum is finite as long as az^{-1} is finite, which in turn requires only $|a| < \infty$ and $z \neq 0$, leading to the ROC spanning over the entire z-plane with an exception of the origin ($z = 0$).

For example, with $N = 16$ and $0 < a < 1$, the pole-zero plot is shown in Figure 12.

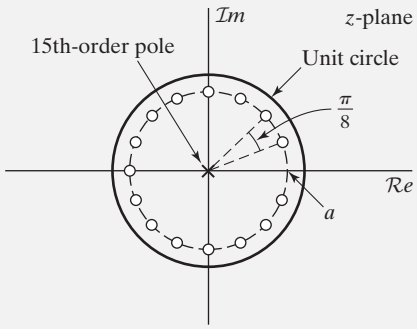

Fig. 12: *Pole-zero plot with* $N = 16$

Specifically, the N roots of the numerator polynomial are at the z-plane locations

$$z_k = ae^{j(2\pi k/N)}, \quad k = 0, 1, ..., N-1$$

4.3 Common z-Transform Pairs

Sequence	Transform	ROC
$\delta[n]$	1	all z
$u[n]$	$\frac{1}{1-z^{-1}}$	$\lvert z\rvert > 1$
$-u[-n-1]$	$\frac{1}{1-z^{-1}}$	$\lvert z\rvert < 1$
$\delta[n-m]$	z^{-m}	all z except 0 (if $m > 0$) or ∞ (if $m < 0$)
$a^n u[n]$	$\frac{1}{1-az^{-1}}$	$\lvert z\rvert > \lvert a\rvert$
$-a^n u[-n-1]$	$\frac{1}{1-az^{-1}}$	$\lvert z\rvert < \lvert a\rvert$
$na^n u[n]$	$\frac{az^{-1}}{(1-az^{-1})^2}$	$\lvert z\rvert > \lvert a\rvert$
$-na^n u[-n-1]$	$\frac{az^{-1}}{(1-az^{-1})^2}$	$\lvert z\rvert < \lvert a\rvert$
$\cos(\omega_0 n)u[n]$	$\frac{1-\cos(\omega_0)z^{-1}}{1-2\cos(\omega_0)-1+z^{-2}}$	$\lvert z\rvert > 1$
$\sin(\omega_0 n)u[n]$	$\frac{\sin(\omega_0)z^{-1}}{1-2\cos(\omega_0)-1+z^{-2}}$	$\lvert z\rvert > 1$
$x[n] = \begin{cases} a^n, & 0 \le n \le N-1, \\ 0, & \text{otherwise.} \end{cases}$	$\frac{1-(az^{-1})^N}{1-az^{-1}}$	$\lvert z\rvert > 0$

4.4 Properties of the z-transform

For the following properties, assume

$$x[n] \overset{\mathscr{Z}}{\longleftrightarrow} X(z) \qquad ROC = R_x$$

$$x_1[n] \overset{\mathscr{Z}}{\longleftrightarrow} X_1(z) \qquad ROC = R_{x1}$$

$$x_2[n] \overset{\mathscr{Z}}{\longleftrightarrow} X_2(z) \qquad ROC = R_{x2}$$

Property	Transform	ROC
Linearity	$ax_1[n] + nx_2[n] \overset{\mathscr{Z}}{\longleftrightarrow} aX_1(z) + bX_2(z)$	all $R_{x1} \cap R_{x2}$
Time shifting	$x[n-n_0] \overset{\mathscr{Z}}{\longleftrightarrow} z^{-n_0}X(z)$	R_x(except at $z=0$ and $z=\infty$)
Multiplication by an exponential sequence	$z_0^n x[n] \overset{\mathscr{Z}}{\longleftrightarrow} X(z/z_0)$	$z_0 R_x(\lvert z_0\rvert\lvert z_1\rvert < \lvert z\rvert < \lvert z_0\rvert\lvert z_2\rvert)$
Differentiation	$nx[n] \overset{\mathscr{Z}}{\longleftrightarrow} -z\frac{dX(z)}{dz}$	R_x
Conjugation	$x^*[n] \overset{\mathscr{Z}}{\longleftrightarrow} X^*(z^*)$	R_x
Time reversal	$x^*[-n] \overset{\mathscr{Z}}{\longleftrightarrow} X^*(1/z^*)$	$\frac{1}{R_x}(1/\lvert z_2\rvert < \lvert z\rvert < 1/\lvert z_1\rvert)$
Convolution	$x_1[n] * x_2[n] \overset{\mathscr{Z}}{\longleftrightarrow} X_1(z)X_2(z)$	$R_{x1} \cap R_{x2}$

Example 4.5

Given that

$$x_1[n] = \delta[n] + 2\delta[n-1] + \delta[n-2]$$

$$x_2[n] = \delta[n] - \delta[n-1]$$

The z-transforms of these two sequences are

$$X_1(z) = 1 + 2z^{-1} + z^{-2}$$

$$X_2(z) = 1 - z^{-1}$$

Therefore, if $y[n] = x_1[n] * x_2[n]$, then

$$Y(z) = X_1(z)X_2(z) = (1 + 2z^{-1} + z^{-2})(1 - z^{-1}) = 1 + z^{-1} - z^{-2} - z^{-3}$$

$$\Updownarrow \mathscr{Z}^{-1}$$

$$y[n] = \delta[n] + \delta[n-1] - \delta[n-2] - \delta[n-3]$$

4.5 LTI Systems and z-Transform

- An LTI system is fully characterised by its impulse response. The output $y[n]$ obtained from the input $x[n]$ is:

$$y[n] = x[n] * h[n]$$

- From the convolution property of the z-transform

$$Y(z) = H(z)X(z)$$

where $H(z) := \mathscr{Z}\{h[n]\}$ is known as the **system function** of an LTI system.

4.6 Example Questions

Question 4.1

The z-transform of the discrete-time signal $x[n]$ converges for $|a| \leq |z| \leq |b|$, with $0 < |a| \leq |b|$. Which of the following statements is always correct?

(a) The discrete-time Fourier transform of $x[n]$ does not converge

(b) The discrete-time Fourier transform of $x[n]$ converges

(c) The discrete-time Fourier transform of $x[n]$ converges if $1 < |a| < |b|$

(d) The discrete-time Fourier transform of $x[n]$ converges if $|a| \leq 1$ and $|b| \geq 1$

(e) The discrete-time Fourier transform of $x[n]$ converges if $|a| < |b| < 1$

ANS: (d)

Question 4.2

Consider a linear, time-invariant (LTI) system defined by the following difference equation:

$$y[n] + \alpha y[n-1] = x[n]$$

where α is a real number. Which of the following statements is correct?

(a) The system is casual and stable for all values of α

(b) The system does not have poles for all values of α

(c) The system is not causal

(d) The system has a pole for $z = -\alpha$

(e) The system has a pole for $z = \alpha$

ANS: (d)

Question 4.3

Consider the discrete-time signals $x[n] = a^{-n}u[n-1]$ (where $u[n]$ is the unit step signal and a is a real and positive number different from zero). Which of the following expressions for the z-transform of $x[n]$ and its region of convergence (ROC) is correct?

(a) $X(z) = \frac{1}{az-1}$ with ROC $|z| > \frac{1}{a}$

(b) $X(z) = \frac{1}{z-a}$ with ROC $|z| > a$

(c) $X(z) = \frac{1}{z+a}$ with ROC $|z| < \frac{1}{a}$

(d) $X(z) = \frac{1}{az-1}$ with ROC $|z| < \frac{1}{a}$

(e) $X(z) = \frac{1}{z-a}$ with ROC $|z| < a$

ANS: (a)

Question 4.4

Consider the LTI system with the following impulse response $h[n] = \delta[n] - 2\delta[n - \frac{k}{2}] + \delta[n-k]$, with k an even number.

(a) Is the system stable? Is it causal?

ANS: stable and casual.

(b) Determine the system function and the transfer function, as a function of k.

ANS: $H(z) = (1 - e^{-j\omega\frac{k}{2}})^2$.

(c) Determine the phase and the group delay of the system, as a function of k.

ANS: $\angle H(e^{j\omega}) = -\frac{k}{2}\omega - \pi$, delayed by $k/2$.

5 Digital Filters

5.1 Filters with Linear Phase

Recall that a transfer function can be decomposed into the components of the **magnitude** and **phase**. For example, an LTI system with the transfer function $H(e^{j\omega}) = e^{-j\omega\alpha}$ with $|\omega| < \pi$ can be expressed as

$$H(e^{j\omega}) = |H(e^{j\omega})|e^{-j\omega\alpha}, \quad |\omega| < \pi,$$

where $|H(e^{j\omega})| = 1$ is the magnitude, $\angle H(e^{j\omega}) = -\omega\alpha$ is the phase.

What does the parameter α do here? The parameter, α, introduces the **group delay** (or, the time shift) to the input signal in its time domain. This will be more obvious if we further take the inverse Fourier transform of $H(e^{j\omega})$,

$$h[n] = \frac{\sin(\pi(n-\alpha))}{\pi(n-\alpha)},$$

where the input signal is delayed by the amount of α.

From the perspective of filters... The transfer function of the form $H(e^{j\omega}) = |H(e^{j\omega})|e^{-j\omega\alpha}$ tells us that, for an input signal, $x[n]$, the system first *filters* the signal by a zero-frequency response, $|H(e^{j\omega})|$, following by shirting the filtered signal by α.

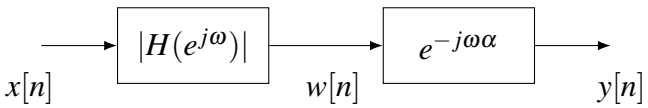

Fig. 13: *Block diagram of a (filter) system with magnitude response $|H(e^{j\omega})|$ followed by phase shift $e^{-j\omega\alpha}$.*

If α is an integer, then the impulse response becomes

$$h[n] = \delta[n-\alpha],$$

the phase of the filter is *linearly proportional* to ω - we thus say, the filter has a **linear phase**.

We can further generalize the linear-phase systems by extending the phase to be $\angle H(e^{j\omega}) = \beta - \omega\alpha$. Still, if α is an integer, the phase is linearly proportional to ω. The transfer function is

$$H(e^{j\omega}) = A(e^{j\omega})e^{-j\omega\alpha+j\beta}.$$

5.2 Difference Equation

A **difference equation** is useful to describe an LTI system. It can be expressed in the following form:

$$y[n] = \sum_{k=1}^{N} a_k y[n-k] + \sum_{k=0}^{M} b_k x[n-k].$$

Example 5.1

The LTI system

$$y[n] = x[n] + x[n-1] + \ldots + x[n-50]$$

is described with a *non-recursive* difference equation.

Example 5.2

The LTI system

$$y[n] = y[n-1] + x[n] - x[n-51]$$

is described with a *recursive* difference equation.

We can find the system function $H(z)$ by taking the z-transform for the difference equation:

$$\begin{aligned}
& y[n] = \sum_{k=1}^{N} a_k y[n-k] + \sum_{k=0}^{M} b_k x[n-k] \\
\Rightarrow \quad & y[n] - \sum_{k=1}^{N} a_k y[n-k] = \sum_{k=0}^{M} b_k x[n-k] \\
\xrightarrow{\mathscr{Z}} \quad & Y(z) - \sum_{k=1}^{N} a_k Y(z) z^{-k} = \sum_{k=0}^{M} b_k X(z) z^{-k} \\
\Rightarrow \quad & H(z) = \frac{Y(z)}{X(z)} = \frac{\sum_{k=0}^{M} b_k z^{-k}}{1 - \sum_{k=1}^{N} a_k z^{-k}} \left(= \frac{B(z)}{A(z)} \right)
\end{aligned}$$

5.3 Finite Impulse Response (FIR) Filters

5.3.1 Definition

If $N = 0$ in a difference equation, there is no recursive part in $H(z)$ (*i.e.*, the output solely depends on the input, the denominator of $H(z)$ is 1, or $A(z) = 1$),

$$H(z) = \sum_{k=0}^{M} b_k \cdot z^{-k}.$$

This type of filter is known as the **finite impulse response** (FIR) filter, as illustrated in Figure 14.

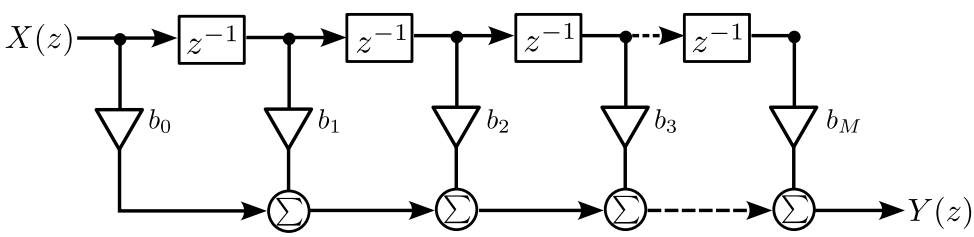

Fig. 14: *Direct form of a finite impulse response (FIR) filter with linear phase*

Taking the inverse z-transform, we get

$$Y(z) = X(z) \underbrace{\sum_{k=0}^{M} b_k \cdot z^{-k}}_{H(z)} \quad \xrightarrow{\mathscr{Z}^{-1}} \quad y[n] = \sum_{k=0}^{M} b_k \cdot x[n-k].$$

Properties of FIR filters

- No poles: all-zero filters. The system function $H(z)$ is defined for the entire z-plane.
- They are inherently stable. Stability of an LTI system:

$$\sum_{n=-\infty}^{+\infty} |h[n]| < \infty$$

  with $h[n]$ of finite length. This condition is always satisfied.

5.3.2 FIR Filter Design by Truncation

Truncation of the impulse response is a simple way to design FIR filters. Mathematically, we multiply the impulse response with a *window function*.

Example 5.3

The impulse response of an ideal low-pass filter (Figure 15) is

$$H(e^{j\omega}) = \begin{cases} 1, & \text{if } |\omega| \leq \omega_c \\ 0, & \text{otherwise} \end{cases} \quad \rightarrow \quad h_d[n] = \frac{\omega_c}{\pi} \frac{\sin \omega_c n}{\omega_c n}$$

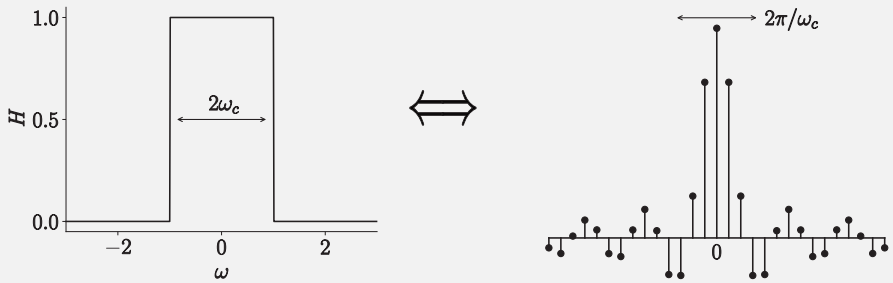

Fig. 15: *Impulse response of an ideal low-pass filter*

The FIR filter $h[n]$ is created by windowing the ideal response:

$$h_T[n] = h[n]w[n], \quad \text{for } n = 0, 1, \ldots, M$$

where $w[n]$ is the window function that is only non-zero for $n = 0, 1, \ldots, M$. Figure 16 illustrates the truncation process with a rectangular window function.

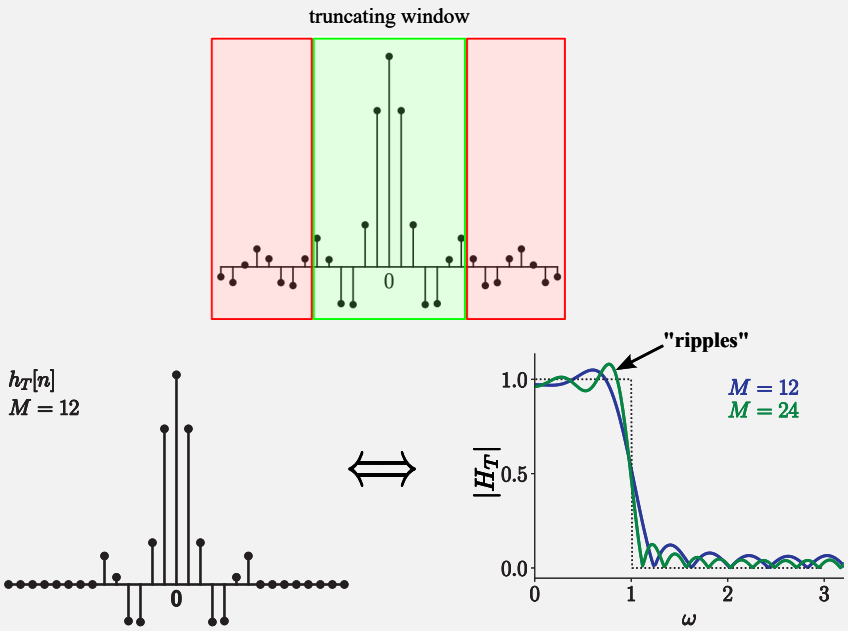

Fig. 16: *Truncation of $h[n]$ with a rectangular window.*

Remarks

1. Typically, the impulse response $h[n]$ is *non-causal* or at least *non-FIR*. The signal illustrated above is both non-causal and infinite.

2. Truncation of $h[n]$ to $\pm\frac{M}{2}$ makes the signal finite. Furthermore, the signal will become causal if we delay the truncated signal $h_T[n]$ by $M/2$.

3. The ripples (indicated with an arrow in Figure 16) are produced due to the discontinuity of the window [a], also referred to as the "Gibbs phenomenon".

[a] This can be derived by quantifying the mean squared error in the frequency domain between $H(e^{j\omega})$ and $H_T(e^{j\omega})$. Clearly, the MSE is minimised when $h[n] = h_T[n]$, but practically not possible (regardless of the number of M used in truncation)!

From remark (3), although it is impossible to fully remove the ripples, it is possible to truncate with other windows to reduce the ripples. *Hanning*, *Hamming*, *Blackman* (also referred to as *Blackman-Harris*) are examples of alternative windows to rectangular window.

5.3.3 FIR Filter Design by Other Methods

This section is NOT covered in the lectures. Massive materials are adopted from textbooks. Please take prudence with the notations used in this section.

- Frequency sampling: take the IDFT of $M+1$ equally spaced samples of $H(e^{j\omega})$.

$$H_{FIR}(e^{j\omega}) = \sum_{n=0}^{M} h[n]e^{-j\omega n}\Big|_{\omega=\frac{2\pi}{M}k,\quad k=0,1,2\ldots,M} \xrightarrow{\mathscr{F}^{-1}} h_{FIR}[n]$$

  - Pros: giving an exact match at the sample points.

  - Cons: intermediate approximation is poor if the spectrum varies rapidly.

- Least-square

- Equiripple method: find the FIR filter to minimise the *maximum weighted error*, $\mathscr{E}$, between the desired response and the actual frequency response of an FIR filter.

$$\mathscr{E}(e^{j\omega}) = \mathscr{W}(\omega)|H(e^{j\omega}) - H_{FIR}(e^{j\omega})|$$

where $\mathscr{W}(\omega)$ is a weighting function used to adjust the weightings applied to the pass band, transition band, and stopband:

$$\mathscr{W}(\omega) = \begin{cases} 1/\delta_1, & 0 \leq \omega \leq \omega_c \\ 0, & \omega_c < \omega < \omega_s \\ 1/\delta_2, & \omega_s \leq \omega \leq \pi \end{cases}$$

5.4 Infinite Impulse Response (IIR) Filters

5.4.1 Definition

If $N \neq 0$ in the generalized difference equation, the system function carries a recursive part in the denominator.

$$H(z) = \frac{\sum_{k=0}^{M} b_k \cdot z^{-k}}{1 - \sum_{k=1}^{N} a_k \cdot z^{-k}} \quad \xrightarrow{\mathscr{Z}^{-1}} \quad y[n] = \sum_{k=0}^{M} b_k \cdot x[n-k] - \sum_{k=0}^{N} a_k \cdot y[n-k]$$

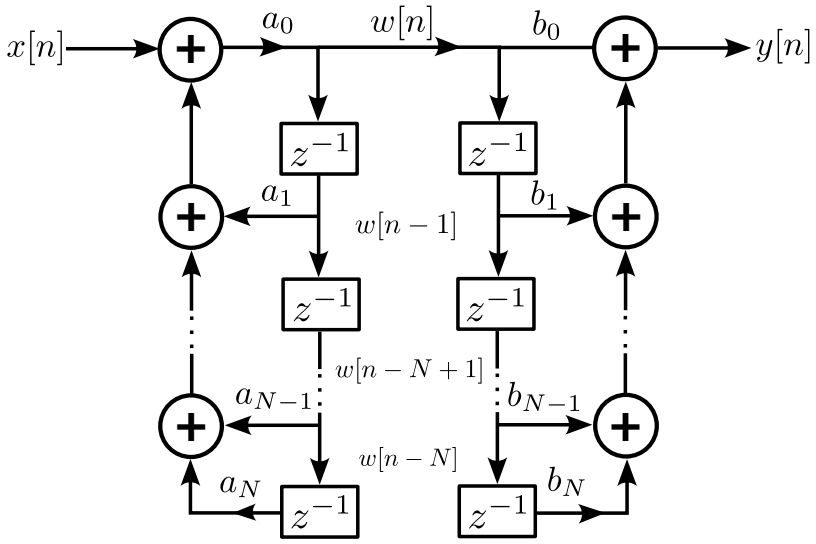

Fig. 17: *Direct realisation of a digital IIR filter*

The system function $H(z)$ can also be represented as a cascade of filters by factorizing the numerator and denominator:

$$H(z) = A\frac{\Pi_{k=1}^{M_1}(1 - f_k z^{-1})\Pi_{k=1}^{M_2}(1 - g_k z^{-1})(1 - g_k^* z^{-1})}{\Pi_{k=1}^{N_1}(1 - c_k z^{-1})\Pi_{k=1}^{N_2}(1 - d_k z^{-1})(1 - d_k^* z^{-1})}$$

5.4.2 IIR Filter Design by Bilinear Transformation

The bilinear transformation transforms from the continuous-time systems in the Laplace domain to discrete-time systems in the z-domain.

An *analogue* filter can always be described by a frequency domain system function of the general form,

$$H(s) = \alpha \frac{(s-z_1)(s-z_2)\ldots(s-z_m)}{(s-p_1)(s-p_2)\ldots(s-p_n)}$$

In bilinear transformation, we replace s by z:

$$z = \frac{\alpha+s}{\alpha-s} \Leftrightarrow s = \alpha \frac{z-1}{z+1}\bigg|_{z=e^{j\omega}} = \alpha \frac{e^{j\frac{\omega}{2}} - e^{-j\frac{\omega}{2}}}{e^{j\frac{\omega}{2}} + e^{-j\frac{\omega}{2}}} = j\alpha \tan\frac{\omega}{2} = j\Omega$$

Frequency mapping:

$$\Omega = \alpha \tan\frac{\omega}{2}$$

Overall, the bilinear transformation allows the design of IIR filters from analogue filters: $H(s) \rightarrow H(\omega)$.

6 Random Processes

6.1 Statistical Descriptions of Noise and Random Processes

Noise signals cannot be described analytically. However, noise realizations in a specific condition share some *statistical* properties.

Random process is the collection of **random variables**, denoted by $\mathbf{x}_n$. The theory of probability can characterise random variables.

Probability Distribution Function A random variable is characterized by its probability distribution function, $F_{\mathbf{x}_n}(\alpha, n)$,

$$F_{\mathbf{x}_n}(\alpha, n) = P\{\mathbf{x}_n \leq \alpha\}.$$

Note that the probability density function increases monotonically with α.

Probability Density Function If $\mathbf{x}_n$ takes a continuous range of values, it can also be characterized by the probability density function, $f_{\mathbf{x}_n}(\alpha, n)$,

$$f_{\mathbf{x}_n}(\alpha, n) = \frac{\partial F_{\mathbf{x}_n}(\alpha, n)}{\partial \alpha}.$$

6.1.1 Mean and Variance of a Distribution

1. The probability density between the range a and b is found

$$\begin{aligned} P\{a \leq \mathbf{x}_n \leq b\} &= \int_a^b f_{\mathbf{x}_n}(\alpha, n)\, \mathrm{d}\alpha \\ &= F_{\mathbf{x}_n}(b, n) - F_{\mathbf{x}_n}(a, n). \end{aligned}$$

For $a = -\infty$ and $b = +\infty$,

$$P\{-\infty \leq \mathbf{x}_n \leq +\infty\} = \int_{-\infty}^{+\infty} f_{\mathbf{x}_n}(x, n)\, \mathrm{d}x = 1$$

Example 6.1 **Uniform distribution**

Consider the probability density function of a uniform distribution described as

$$f_{\mathbf{x}_n}(\alpha, n) = \begin{cases} \frac{1}{b-a}, & a \leq \alpha \leq b \\ 0, & \text{otherwise} \end{cases},$$

the corresponding probability distribution is

$$F_{\mathbf{x}_n}(\alpha, n) = \begin{cases} 0, & a < 0 \\ \frac{1}{b-a}(\alpha - a), & a \leq \alpha \leq b \\ 1, & \alpha > b \end{cases}.$$

As shown in Figure 18.

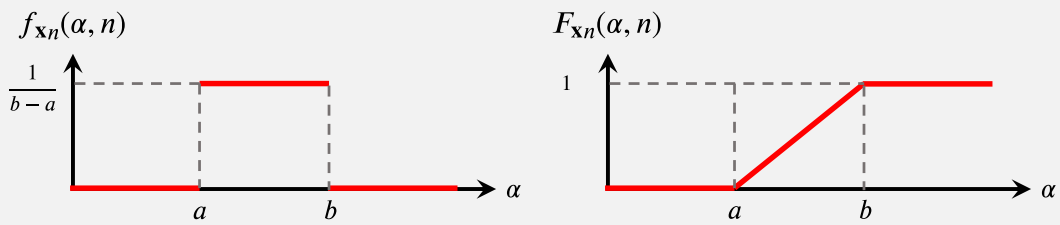

Fig. 18: *Plot of the probability density function and probability distribution function of a sample uniform distribution.*

2. The **mean** of a random variable, also the **expected value**, is defined as

$$m_{\mathbf{x}_n} = \varepsilon\{\mathbf{x}_n\} = \int_{-\infty}^{+\infty} \alpha f_{\mathbf{x}_n}(\alpha, n)\, \mathrm{d}\alpha,$$

where $\varepsilon\{\cdot\}$ denotes the **expectation operator**. Mathematically,

$$\varepsilon\{g(\mathbf{x}_n)\} = \int_{-\infty}^{+\infty} g(\alpha) f_{\mathbf{x}_n}(\alpha, n)\, \mathrm{d}\alpha.$$

Example 6.2 Uniform distribution

For the uniform distribution shown in 1, the mean value is found

$$m_{\mathbf{x}_n} = \int_a^b \frac{\alpha}{b-a}\, \mathrm{d}\alpha = \frac{1}{b-a}\frac{b^2-a^2}{2} = \frac{a+b}{2}.$$

3. The **variance** is define as

$$\sigma_{\mathbf{x}_n}^2 = \varepsilon\{(\mathbf{x}_n - m_{\mathbf{x}_n})^2\} = \int_{-\infty}^{+\infty} (\alpha - m_{\mathbf{x}_n})^2 f_{\mathbf{x}_n}(\alpha, n)\, \mathrm{d}\alpha,$$

which is the second-order moment.

Example 6.3 Uniform distribution

For the uniform distribution shown in 1, the variance is found

$$\sigma_{\mathbf{x}_n}^2 = \int_a^b \Big(\alpha - \underbrace{\frac{a+b}{2}}_{m_{\mathbf{x}_n}}\Big)^2 \frac{1}{b-a}\, \mathrm{d}\alpha = \frac{(b-a)^2}{12}.$$

6.1.2 Multivariant Probability Functions

Joint Probability Distribution Function The *joint* probability distribution function between two random variables $\mathbf{x}_n$, $\mathbf{x}_m$ is given as

$$F_{\mathbf{x}_n,\mathbf{x}_m}(\alpha_1, \alpha_2, n, m) = P\{\mathbf{x}_n \leq \alpha_1, \mathbf{x}_m \leq \alpha_2\},$$

The probability distribution function of order N is given as

$$F_{\mathbf{x}_{n_1},\ldots,\mathbf{x}_{n_N}}(\alpha_1, \ldots, \alpha_N, n_1, \ldots, n_N) = P(\mathbf{x}_{n_1} \leq \alpha_1, \ldots, \mathbf{x}_{n_N} \leq \alpha_N).$$

Joint Probability Density Function The *joint* probability density function between two random variables $\mathbf{x}_n$, $\mathbf{x}_m$ are given as

$$f_{\mathbf{x}_n,\mathbf{x}_m}(\alpha_1,\alpha_2,n,m) = \frac{\partial^2 F_{\mathbf{x}_n,\mathbf{x}_m}(\alpha_1,\alpha_2,n,m)}{\partial\alpha_1\partial\alpha_2}.$$

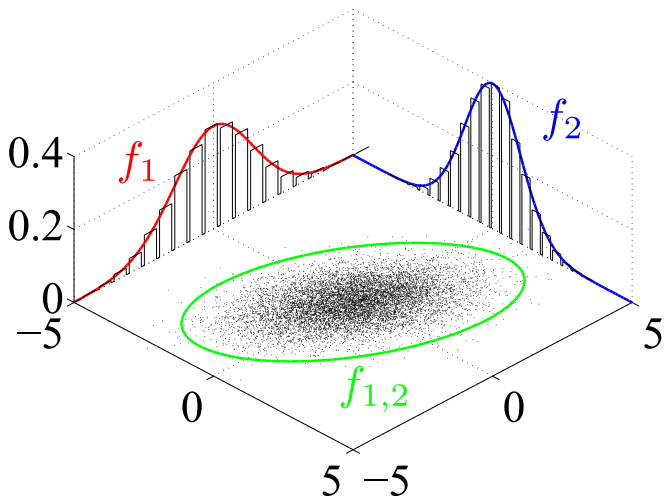

Fig. 19: *Many sample observations (black) are shown from a joint probability distribution. Figure adapted and modified based on WikiPedia.*

Statistical Independence If $\mathbf{x}_n$ and $\mathbf{x}_m$ are **statistically independent**, or **uncorrelated**, the joint probability distribution function is equivalent to the product between each single probability distribution function,

$$F_{\mathbf{x}_n,\mathbf{x}_m}(\alpha_1,\alpha_2,n,m) = F_{\mathbf{x}_n}(\alpha_1,n)F_{\mathbf{x}_m}(\alpha_2,m),$$

this also implies that

$$f_{\mathbf{x}_n,\mathbf{x}_m}(\alpha_1,\alpha_2,n,m) = f_{\mathbf{x}_n}(\alpha_1,n)f_{\mathbf{x}_m}(\alpha_2,m).$$

Hence, the mean values are also separable,

$$\varepsilon\{\mathbf{x}_n\mathbf{x}_m\} = \varepsilon\{\mathbf{x}_n\}\varepsilon\{\mathbf{x}_m\} = m_{\mathbf{x}_n}m_{\mathbf{x}_m}.$$

Autocorrelation Function The autocorrelation function of the random process is defined as the expected value of the product $\mathbf{x}_n\mathbf{x}_m$, denoted by $\phi_{xx}[n,m]$,

$$\phi_{xx}[n,m] = \varepsilon\{\mathbf{x}_n\mathbf{x}_m\}.$$

Example 6.4 **Uniform Distribution**

Given a random process with uncorrelated samples of uniform distribution in $[1,1]$ (*i.e.*, $a=-1$, $b=1$), the autocorrelation function computed with the following steps

1. The mean is found as
$$m_{\mathbf{x}_n} = \frac{a+b}{2} = 0.$$

2. The variance is found as
$$\sigma^2_{\mathbf{x}_n} = \frac{(b-a)^2}{12} = \frac{1}{3}.$$

3. The autocorrelation between m and n is
$$\phi_{xx}[n,m] = \varepsilon\{\mathbf{x}_n\mathbf{x}_m\} = \begin{cases} \varepsilon\{\mathbf{x}_n\}\varepsilon\{\mathbf{x}_m\}, & \text{if } m \neq n \\ \varepsilon\{\mathbf{x}_n^2\}, & \text{if } m = n \end{cases} = \begin{cases} 0, & \text{if } m \neq n \\ \frac{1}{3}, & \text{if } m = n \end{cases}.$$

6.2 Stationarity

Definition A random process is **stationary** of order N, if its joint probability density functions up to order N, does not depend on time shifts.

For example, $N = 2$, the stationarity states that

$$F_{\mathbf{x}_{n+k}}(\alpha, n+k) = F_{\mathbf{x}_n}(\alpha, n), \quad \forall k \in \mathbb{Z},$$

$$F_{\mathbf{x}_{n+k},\mathbf{x}_{m+k}}(\alpha_1, \alpha_2, n+k, m+k) = F_{\mathbf{x}_n,\mathbf{x}_m}(\alpha_1, \alpha_2, n, m), \quad \forall k \in \mathbb{Z}.$$

A random process is **strict-sense stationary** if it is stationary for *any* order N.

6.2.1 Wide-Sense Stationarity

If the process is stationary of order 2 ($N = 2$). The following two properties can be derived,

1. its mean does not depend on time, *i.e.*,
$$m_{\mathbf{x}_n} = \varepsilon\{\mathbf{x}_n\} = m_{\mathbf{x}}.$$

2. the autocorrelation function depends only on the time difference,
$$\phi_{xx}[n,m] = \varepsilon\{\mathbf{x}_n\mathbf{x}_m\} = \int_{-\infty}^{+\infty}\int_{-\infty}^{+\infty} \alpha_1\alpha_2 f_{\mathbf{x}_n,\mathbf{x}_m}(\alpha_1\alpha_2, n, m)\, \mathrm{d}\alpha_1 \mathrm{d}\alpha_2,$$
now define $\ell = m - n$ (for which ℓ can be regarded as a time shift), we have $m = n + \ell$
$$\begin{aligned}\phi_{xx}[n, n+\ell] = \varepsilon\{\mathbf{x}_n\mathbf{x}_{n+\ell}\} &= \int_{-\infty}^{+\infty}\int_{-\infty}^{+\infty} \alpha_1\alpha_2 f_{\mathbf{x}_n,\mathbf{x}_{n+\ell}}(\alpha_1\alpha_2, n, n+\ell)\, \mathrm{d}\alpha_1 \mathrm{d}\alpha_2 \\ &= \phi_{xx}[\ell].\end{aligned}$$

A process with the properties above is referred to as **wide-sense stationary** (WSS).

While the two above properties derive from the definition of stationarity of order 2, **they do not imply stationarity of order 2**.

Example 6.5 Uniform Distribution

A random signal with uncorrelated samples of uniform distribution in $[a,a]$. The mean of the signal is

$$m_{\mathbf{x}_n} = \frac{-a+a}{2} = 0,$$

and the autocorrelation function is

$$\phi_{xx}[n,m] = \frac{a^2}{3}\delta[n-m].$$

Since the mean does not depend on n and the autocorrelation function depends only on the time lag $(n-m)$, the process is WSS.

Cross-Correlation Function The cross-correlation function is defined as

$$\phi_{xy}[n,m] = \varepsilon\{\mathbf{x}_n\mathbf{y}_m^*\},$$

where $\mathbf{x}_n$ and $\mathbf{y}_n$ are two distinct random signals.

Chnage in notation

From this subsection onward, the random variable at the discrete-time n will be denoted as $x[n]$, instead of $\mathbf{x}_n$.

6.3 Ergodicity

Definition A process is **ergodic** for the mean (time-average) if, for any single realization of the process of $x[n]$,

$$\langle x[n]\rangle = \lim_{L\to\infty}\frac{1}{2L+1}\sum_{n=-L}^{L} x[n] = \varepsilon\{\mathbf{x}_n\} = m_x.$$

Extended Properties A process is ergodic for the autocorrelation of

$$\langle x[n]x[n+m]\rangle = \lim_{L\to\infty}\frac{1}{2L+1}\sum_{n=-L}^{L} x[n]x[n+m] = \varepsilon\{\mathbf{x}_n\mathbf{x}_{n+m}\} = \phi_{xx}[m].$$

For a WSS random process, ergodic for the autocorrelation function is

$$\langle x^2[n]\rangle = \lim_{L\to\infty}\frac{1}{2L+1}\sum_{n=-L}^{L} x^2[n] = \phi_{xx}[0].$$

The value of the autocorrelation function is zero for an ergodic process corresponds to the power of each of the process realizations.

If the process is zero-mean,

$$\lim_{L\to\infty}\frac{1}{2L+1}\sum_{n=-L}^{L} x^2[n] = \phi_{xx}[0] = \sigma_{\mathbf{x}_n}^2.$$

6.3.1 Variability of Estimates

In practice, we cannot compute the exact time average since we do not record infinite samples. Thus, we need to make estimates[1] from a finite-length realisation.

- Estimating the mean:

$$\widehat{m}_x = \frac{1}{L}\sum_{n=0}^{L-1} x[n].$$

- Estimating the variance:

$$\widehat{\sigma}_x^2 = \frac{1}{L}\sum_{n=0}^{L-1} (x[n]-\widehat{m}_x)^2.$$

- Estimating the autocorrelation function:

$$\widehat{\phi}_{xx}[m] = \frac{1}{L}\sum_{n=0}^{L-m-1} x[n]\,x[n+m].$$

The quantities, $\widehat{m}_x$, $\widehat{\sigma}_x^2$, and $\widehat{\phi}_{xx}[m]$ are also *random* variables. Hence, we can compute the mean and variability of these estimated quantities.

- The mean of the estimated mean with a finite length:

$$\varepsilon\{\widehat{m}_x\} = \varepsilon\left\{\frac{1}{L}\sum_{n=0}^{L-1} x[n]\right\} = \frac{1}{L}\sum_{n=0}^{L-1} \varepsilon\{x[n]\} = m_x,$$

  this means the estimated mean is **unbiased**.

- The variability of the estimated mean with a finite length (for simplicity, assume the true mean $m_x = 0$):

$$\sigma_{\widehat{m}_x}^2 = \varepsilon\{(\widehat{m}_x - \varepsilon\{\widehat{m}_x\})^2\} = \varepsilon\{(\widehat{m}_x - m_x)^2\} = \varepsilon\left\{\left(\frac{1}{L}\sum_{n=0}^{L-1} x[n]\right)^2\right\} = \frac{\sigma_x^2}{L}.$$

Variability in Estimates of the Autocorrelation Function The estimate of the autocorrelation function in the finite-length realization is a **biased** estimate.

$$\varepsilon\{\widehat{\phi}_{xx}[m]\} = \frac{1}{L}\sum_{n=0}^{L-m-1} \varepsilon\{x[n]\,x[n+m]\} = \frac{L-m}{L}\phi_{xx}[m] = \underbrace{(1-\frac{m}{L})}_{\text{deviation from truth}} \phi_{xx}[m].$$

To fix this, an alternative estimator is proposed to eliminate the bias,

$$\widehat{\phi}_{xx}[m] = \frac{1}{L-m}\sum_{n=0}^{L-m-1} x[n]\,x[n+m].$$

[1] such estimated quantities are denoted with a superscript caret, $\widehat{\ }$, to distinguish from the real values

6.4 Power Spectral Density

Definition The power spectral density (PSD) of a random process is the ensemble average of the power spectrum of the random process realizations,

$$\Phi_{xx}(e^{j\omega}) = \varepsilon\left\{\lim_{L\to\infty}\frac{1}{2L+1}|X_L(e^{j\omega})|^2\right\},$$

where $X_L(e^{j\omega}) = \sum_{n=-L}^{L} x[n]e^{-j\omega n}$ is the Fourier transform of the random variable $x[n]$.

Signal Power The power spectral density of an ergodic random signal,

$$\text{signal power} = \frac{1}{2\pi}\int_{-\pi}^{+\pi}\Phi_{xx}(e^{j\omega})\mathrm{d}\omega$$

Derivation 6.1

Start from the RHS of the equation shown above,

$$\begin{aligned}
&\frac{1}{2\pi}\int_{-\pi}^{+\pi}\Phi_{xx}(e^{j\omega})\mathrm{d}\omega \\
&= \frac{1}{2\pi}\int_{-\pi}^{+\pi}\varepsilon\left\{\lim_{L\to\infty}\frac{1}{2L+1}|X_L(e^{j\omega})|^2\right\}\mathrm{d}\omega \\
&= \varepsilon\left\{\lim_{L\to\infty}\frac{1}{2L+1}\,\frac{1}{2\pi}\int_{-\pi}^{+\pi}|X_L(e^{j\omega})|^2\mathrm{d}\omega\right\}.
\end{aligned}$$

By Parseval's theorem:

$$\frac{1}{2\pi}\int_{-\infty}^{+\infty}|X(e^{j\omega})|^2\mathrm{d}\omega = \sum_{n=-\infty}^{+\infty}|x[n]|^2.$$

Therefore,

$$\frac{1}{2\pi}\int_{-\pi}^{+\pi}\Phi_{xx}(e^{j\omega})\mathrm{d}\omega = \varepsilon\left\{\lim_{L\to\infty}\frac{1}{2L+1}\sum_{n=-\infty}^{+\infty}|x[n]|^2\right\},$$

which is the power of the signal.

Extended Property The power spectral density of a WSS random process is the discrete-time Fourier transform (DTFT) of the autocorrelation function,

$$\Phi_{xx}(e^{j\omega}) = \mathscr{F}\{\phi_{xx}[m]\},$$

where $\mathscr{F}\{\cdot\}$ denotes the discrete-time Fourier transform.

Derivation 6.2

$$\begin{aligned}
|X_L(e^{j\omega})|^2 &= X_L(e^{j\omega})X_L^*(e^{j\omega}) \\
&= \sum_{n=-L}^{L}\sum_{r=-L}^{L} x[n]x^*[r]e^{-j\omega(n-r)}.
\end{aligned}$$

Therefore,

$$\Phi_{xx}(e^{j\omega}) = \lim_{L\to\infty} \varepsilon\left\{\frac{1}{2L+1}\sum_{n=-L}^{L}\sum_{r=-L}^{L} x[n]x^*[r]e^{-j\omega(n-r)}\right\}$$
$$= \lim_{L\to\infty}\left\{\frac{1}{2L+1}\sum_{n=-L}^{L}\sum_{r=-L}^{L} \varepsilon\{x[n]x^*[r]e^{-j\omega(n-r)}\}\right\}.$$

For a WSS random signal,

$$\varepsilon\{x[n]x^*[r]\} = \phi_{xx}[n,r] = \phi_{xx}[n-r].$$

Therefore,

$$\Phi_{xx}(e^{j\omega}) = \lim_{L\to\infty}\left\{\frac{1}{2L+1}\sum_{n=-L}^{L}\sum_{r=-L}^{L} \varepsilon\{\phi_{xx}[n-r]e^{-j\omega(n-r)}\}\right\} = \mathscr{F}\{\phi_{xx}[m]\}.$$

Therefore, for a WSS and ergodic random signal,

$$\Phi(e^{j\omega}) = \mathscr{F}\left\{\lim_{L\to\infty}\frac{1}{2L+1}\sum_{n=-L}^{L} x[n]\, x[n+m]\right\}.$$

This tells us, the PSD is the discrete-time Fourier transform of the autocorrelation function of the process.

6.5 Periodogram

Definition The periodogram is an estimation of the PSD with the limit neglected.

$$\widehat{\Phi}_{xx}(e^{j\omega}) = \frac{1}{2L+1}|X_L(e^{j\omega})|^2$$

Therefore, it can be shown that the estimation of PSD from the periodogram and from the autocorrelation function is exactly the same:

$$\widehat{\Phi}_{xx}(e^{j\omega}) = DTFT\left\{\frac{1}{2L+1}\sum_{n=-L}^{n=L} x[n]\, x[n+m]\right\} = DTFT\{\widehat{\phi}_{xx}[m]\} = \frac{1}{2L+1}|X_L(e^{j\omega})|^2$$

Bias of the Periodogram Estimate The expected value of the bias is

$$\varepsilon\{\widehat{\Phi}_{xx}(e^{j\omega})\} = \varepsilon\left\{\frac{1}{2L+1}|X_L(e^{j\omega})|^2\right\}$$

This is equivalent to

$$x_L[n] = \begin{cases} x[n], & -L \le n \le L \\ 0, & \text{otherwise} \end{cases} = x[n]\cdot w_{2L+1}[n] \quad \text{with} \quad w_{2L+1}[n] = \begin{cases} 1, & -L \le n \le L \\ 0, & \text{otherwise} \end{cases}$$

Therefore, the periodogram is a biased estimate. The estimate tends to the PSD of the windowed random signal,

$$\varepsilon\{\widehat{\Phi}_{xx}(e^{j\omega})\} = \Phi_{xx}(e^{j\omega}) * |W_{2L+1}(e^{j\omega})|^2$$

Bartlett's Method A major problem of the periodogram is **the variance of the estimate of the PSD is proportional to the square of the PSD value** and **remains constant with increasing** L.

To mitigate this issue, we need a compromise between the bias and variance of the estimate. With N recorded samples, one could compromise the bias by dividing N by the number of intervals K, yielding $L = N/K$.

Thus, we can estimate a periodogram by summing multiple "piecewise" periodograms on each interval:

$$\widehat{\Phi}^B_{xx}(e^{j\omega}) = \frac{1}{K}\sum_{r=1}^{K}\hat{\Phi}_{x_r x_r}(e^{j\omega}) \quad \text{with} \quad \hat{\Phi}_{x_r x_r} = \frac{1}{L}|X_r(e^{j\omega})|^2$$

The expected values of the periodograms:

$$\varepsilon\{\widehat{\Phi}^B_{xx}(e^{j\omega})\} = \varepsilon\left\{\frac{1}{K}\sum_{r=1}^{K}\widehat{\Phi}_{x_r x_r}(e^{j\omega})\right\} = \Phi_{xx}(e^{j\omega}) * |W_{2L+1}(e^{j\omega})|^2$$

The variance of the periodograms:

$$var\{\widehat{\Phi}^B_{xx}(e^{j\omega})\} = var\left\{\frac{1}{K}\sum_{r=1}^{K}\widehat{\Phi}_{x_r x_r}(e^{j\omega})\right\} = \frac{1}{K}var\{\widehat{\Phi}_{xx}(e^{j\omega})\}$$

The variance of the estimation decreases as K increases.

6.6 Filtering of Random Signals

$$y[n] = x[n] * h[n] = \sum_{k=-\infty}^{+\infty} x[k]h[n-k] = \sum_{k=-\infty}^{+\infty} h[k]x[n-k]$$

Mean of $y[n]$

$$m_y[n] = \varepsilon\left\{\sum_{k=-\infty}^{+\infty} x[k]h[n-k]\right\} = \sum_{k=-\infty}^{+\infty} h[k]\varepsilon\{x[n-k]\} = m_x\sum_{k=-\infty}^{+\infty} h[k]$$

Autocorrelation function of $y[n]$

$$\begin{aligned}
\phi_{yy}[n,\ell] &= \varepsilon\{y[n]\ y[n+\ell]\} \\
&= \varepsilon\left\{\sum_{k=-\infty}^{+\infty} h[k]x[n-k] \sum_{k=-\infty}^{+\infty} h[k]x[n+\ell-k]\right\} \\
&= \varepsilon\left\{\sum_{k=-\infty}^{+\infty}\sum_{r=-\infty}^{+\infty} h[k]\ h[r]\ x[n-k]\ x[n+\ell-r]\right\} \\
&= \sum_{k=-\infty}^{+\infty}\sum_{r=-\infty}^{+\infty} h[k]\ h[r]\ \varepsilon\{x[n-k]\ x[n+\ell-r]\} \\
&= \sum_{k=-\infty}^{+\infty}\sum_{r=-\infty}^{+\infty} h[k]\ h[r]\ \phi_{xx}[\underbrace{\ell-r+k}_{\text{def. } r-k=q}] \\
&= \sum_{k=-\infty}^{+\infty}\sum_{q=-\infty}^{+\infty} h[k]\ h[k+q]\ \phi_{xx}[\ell-q] \\
&\left(\text{define } g[q] = \sum_{k=\infty}^{+\infty} h[k]\ h[k+q] = h[q]*h[-q]\right) \\
&= \sum_{q=-\infty}^{+\infty} g[q]\phi_{xx}[\ell-q] = g[\ell]*\phi_{xx}[\ell] = \phi_{yy}[\ell]
\end{aligned}$$

PSD of $y[n]$ The PSD of $y[n]$ is the discrete-time FT of the autocorrelation function $\phi_{yy}[\ell]$,

$$\phi_{yy}[\ell] = g[\ell]*\phi_{xx}[\ell]$$

with $g[q] = h[q]*h[-q]$,

$$\Phi_{yy}(e^{j\omega}) = \mathscr{F}\{g[\ell]*\phi_{xx}[\ell]\} = G(e^{j\omega})\cdot\Phi_{xx}(e^{j\omega})$$

with

$$G(e^{j\omega}) = \mathscr{F}\{h[q]*h[-q]\} = H(e^{j\omega})\cdot H^*(e^{j\omega}) = |H(e^{j\omega})|^2$$

Therefore,

$$\Phi_{yy}(e^{j\omega}) = |H(e^{j\omega})|^2\cdot\Phi_{xx}(e^{j\omega})$$

6.7 Linear Predictor

The mean square error for the linear predictor

$$\varepsilon\{|e[n]|^2\} = \varepsilon\left\{\left(x[n]-\sum_{k=1}^{N} a_k x[n-k]\right)^2\right\} = \phi_{xx}[0] + \sum_{k=1}^{N}\sum_{r=1}^{N} a_k a_r \phi_{xx}[r-k] - 2\sum_{k=1}^{N} a_k\phi_{xx}[k]$$

Minimising the MSE,

$$\frac{\partial\varepsilon\{|e[n]|^2\}}{\partial a_\ell} = 0, \quad \ell = 1,2,\ldots,N$$

with

$$\frac{\partial\varepsilon\{|e[n]|^2\}}{\partial a_\ell} = 2\sum_{k=1}^{N} a_k\phi_{xx}[k-\ell] - 2\phi_{xx}[\ell]$$

Hence

$$2\sum_{k=1}^{N} a_k \phi_{xx}[k-\ell] - 2\phi_{xx}[\ell] = 0 \quad \Rightarrow \quad \boxed{\sum_{k=1}^{N} a_k \phi_{xx}[k-\ell] = \phi_{xx}[\ell]}$$

which is equivalent to

$$\varepsilon\{e[n]\, x[n-k]\} = 0, \quad k = 1,2,\ldots,N$$

The error in the linear prediction can thus be seen as part of the innovation of the process that is not contained in the previous N samples.

6.8 Modelling

Consider an LTI system with the input $u[n]$, system function $H(e^{j\omega})$, and output $x[n]$, for which $u[n]$ is a white random process.

$$u[n] \longrightarrow \boxed{H(e^{j\omega})} \longrightarrow x[n]$$

Recall that in Section 5, the system response can be expressed using the difference equation

$$x[n] = \sum_{k=1}^{N} a_k x[n-k] + \sum_{k=0}^{M} b_k u[n-k].$$

Further, the system function corresponding to the difference form is

$$H(z) = \frac{\sum_{k=0}^{M} b_k z^{-k}}{1 - \sum_{k=1}^{N} a_k z^{-k}} \quad \Leftrightarrow \quad H(e^{j\omega}) = \frac{\sum_{k=0}^{M} b_k e^{-j\omega k}}{1 - \sum_{k=1}^{N} a_k e^{-j\omega k}},$$

Therefore, the power spectrum of $x[n]$ is found

$$\Phi_{xx}(e^{j\omega}) = \sigma_u^2 \cdot |H(e^{j\omega})|^2 = \sigma_u^2 \cdot \left| \frac{\sum_{k=0}^{M} b_k e^{-j\omega k}}{1 - \sum_{k=1}^{N} a_k e^{-j\omega k}} \right|^2.$$

This model is known as the **autoregressive, moving average** model (ARMA).

- By setting $M = 0$: autoregressive (AR) model

$$x[n] = \sum_{k=1}^{N} a_k x[n-k] + u[n] \quad \text{and} \quad \Phi_{xx}(e^{j\omega}) = \sigma_u^2 \cdot \frac{1}{|1 - \sum_{k=1}^{N} a_k e^{-j\omega k}|^2}$$

- By setting $N = 0$: moving average (MA) model

$$x[n] = \sum_{k=0}^{M} b_k u[n-k] \quad \text{and} \quad \Phi_{xx}(e^{j\omega}) = \sigma_u^2 \cdot \left| \sum_{k=0}^{M} b_k e^{-j\omega k} \right|^2$$

6.9 Example Questions

Question 6.1

Let $x[n]$ and $y[n]$ be stationary, uncorrelated to each other, discrete-time random processes with mean values m_x and m_y, respectively, and $w[n] = x[n] \cdot y[n]$. The mean value of $w[n]$ is

(a) Always zero

(b) Zero only of $m_x = 0$ and $m_y = 0$

(c) Zero if $m_x = 0$ or $m_y = 0$

(d) Always smaller than m_x

(e) Always smaller than m_y

ANS: (c)

Question 6.2

Let $x[n]$ and $y[n]$ be two stationary, zero-mean, uncorrelated to each other, discrete-time random processes, with variances σ_x^2 and σ_y^2, and power spectra $\Phi_{xx}(e^{j\omega})$ and $\Phi_{yy}(e^{j\omega})$, respectively.

Let's define the random process $w[n] = x[n] + 2y[n]$, with variance σ_w^2 and power spectrum $\Phi_{ww}(e^{j\omega})$. Which of the following relations is always correct?

(a) $\Phi_{ww}(e^{j\omega}) = 2\Phi_{xx}(e^{j\omega})\Phi_{yy}(e^{j\omega})$

(b) $\Phi_{ww}(e^{j\omega}) = \Phi_{xx}(e^{j\omega}) + 2\Phi_{yy}(e^{j\omega})$

(c) $\sigma_w^2 = \sigma_x^2 + 2\sigma_y^2$

(d) $\sigma_w^2 = \sigma_x^2 + 4\sigma_y^2$

(e) $\sigma_w^2 = 0$

ANS: (d)

Question 6.3

Consider the wide-sense stationary (WSS) random process $x[n]$, with autocorrelation function $\phi_{xx}[\ell]$ and unitary variance. The autocorrelation function $\phi_{xx}[\ell]$ is equal to zero for all values of the time lag ℓ for which $|\ell| \geq 3$. The random process $x[n]$ is down-sampled by a factor of 3 to obtain the down-sampled random process $e[n]$. Which of the following expressions/statements for the autocorrelation function $\phi_{ee}[\ell]$ of $e[n]$ is correct?

(a) $\phi_{ee}[\ell] = \delta[\ell]$

(b) $\phi_{ee}[\ell] = \phi_{xx}[\ell]$

(c) $\phi_{ee}[\ell] = 3\phi_{xx}[\ell]$

(d) $\phi_{ee}[\ell] = 0$ for all values of ℓ

(e) $\phi_{ee}[\ell]$ is an odd function

ANS: (d)

Question 6.4

Consider the cascade of two LTI systems as represented below:

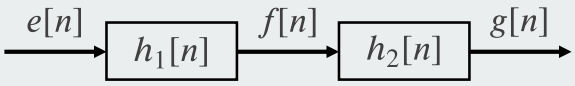

where $h_1[n] = \delta[n] - \delta[n-1]$ and $H_2(e^{j\omega}) = \begin{cases} 1, & |\omega| < \omega_c \\ 0, & \omega_c < |\omega| \leq \pi \end{cases}$ with $\omega_c < \pi$. Moreover, $e[n]$ is a stationary, white random signal, with zero mean and power $\sigma_e^2 = 1$.

(a) Find and plot the power spectrum $\Phi_{ff}(e^{j\omega})$ of the random signal $f[n]$.

ANS: $\Phi_{ff}(e^{j\omega}) = 2(1 - \cos\omega)$.

(b) Find the autocorrelation function $\phi_{ff}[\ell]$ of the random signal.

ANS: $\phi_{ff}[\ell] = 2\delta[\ell] - \delta[\ell-1] - \delta[\ell+1]$.

(c) Find the power spectrum $\Phi_{gg}(e^{j\omega})$ of the random signal $g[n]$ as a function of ω_c (cut-off frequency of the second LTI system).

ANS: $\phi_{gg}[\ell] = \begin{cases} 2(1-\cos\omega), & |\omega| \leq \omega_c \\ 0, & \omega_c < |\omega| \leq \pi \end{cases}$.

(d) Find the power σ_e^2 of the random signal $g[n]$ as a function of ω_c (cut-off frequency of the second LTI system).

ANS: $\sigma_g^2 = \dfrac{2\omega_c}{\pi}$.

This work is licensed under a Creative Commons Attribution-NonCommercial 4.0 International License.